Gc
929.2
V3814v
1695563

M. E.

REYNOLDS HISTORICAL
GENEALOGY COLLECTION

ALLEN COUNTY PUBLIC LIBRARY
3 1833 01432 9780

The

Ancestry

of

GARRET CONRAD VAN WAGNEN

in the

Five collateral lines

of

PELS, ELTING, VAN DEN BERG, TEN EYCK, and BOGART

and in the

Ten allied lines

of

SLECHT

LANSING-HALENBECK

RAPALJE

VAN ARSDALEN-VAN SCHOUW

BERGEN-LUBBERTSEN

BODINE-CROCHERON

by

Frank L. Van Wagnen

a great-grandson

Buffalo, N. Y.

1946

Gift '46
Frank L. Van Wagnen
Buffalo, N.Y.

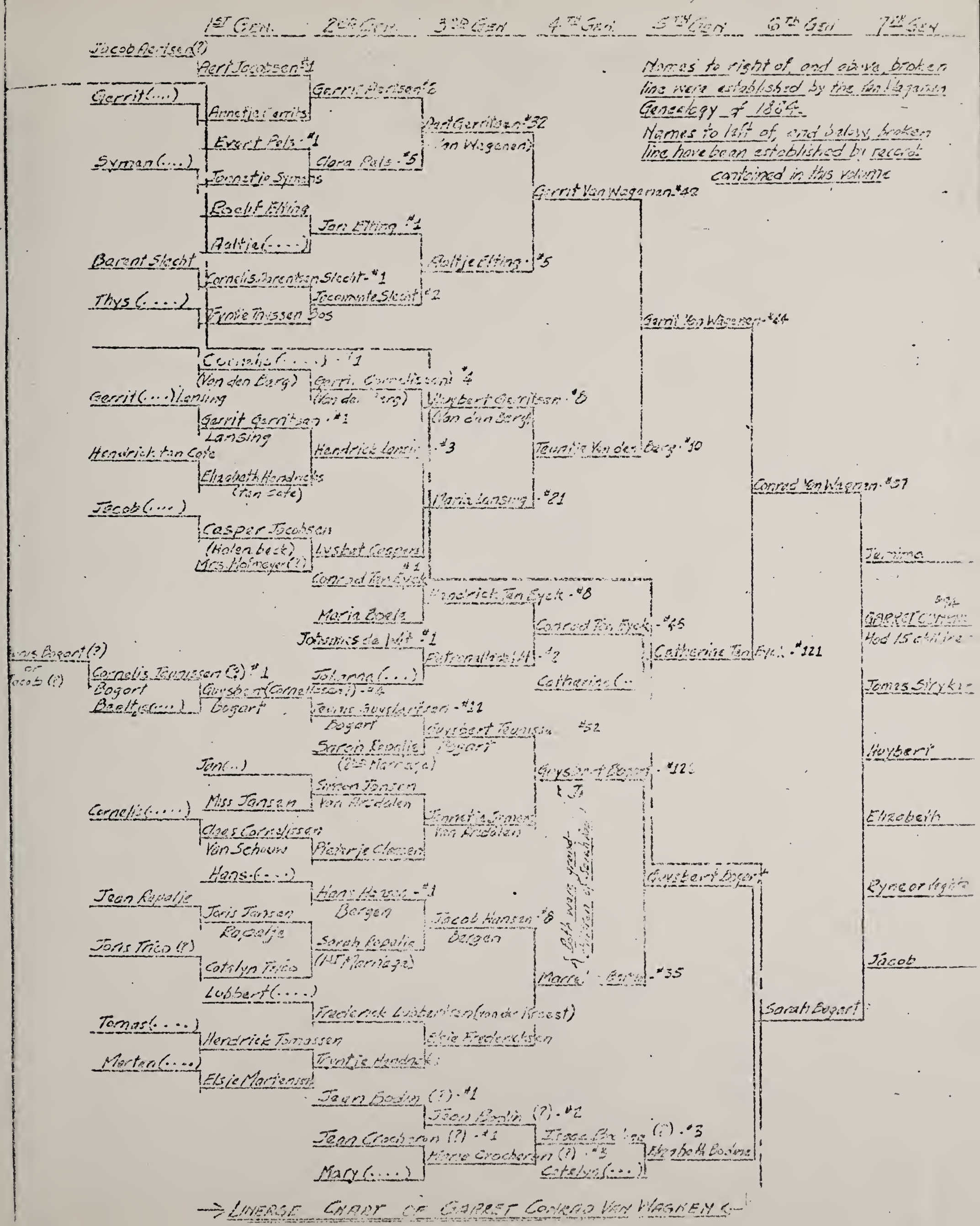
1ST GEN.
2ND GEN.
3RD GEN.
4TH GEN.
5TH GEN.
6TH GEN.
7TH GEN.
Names to right of, and above, broken line were established by the Van Wagenen Genealogy of 1884.
Names to left of, and below, broken line have been established by records contained in this volume
Jacob Aertsen(?)
Aert Jacobsen #1
Gerrit(....)
Annetje Gerrits
Gerrit Aertsen #2
Aert Gerritsen #32
(Van Wagenen)
Evert Pels #1
Syman(....)
Clara Pels #5
Jannetje Symens
Gerrit Van Wagenen #42
Roelif Elting
Jan Elting #1
Aaltje(....)
Barent Slecht
Aaltje Elting #5
Cornelis Barentsen Slecht #1
Thys(....)
Jacomynte Slecht #2
Fyntie Thyssen Bos
Gerrit Van Wagenen #44
Cornelis(....) #1
(Van den Berg)
Gerrit Cornelissen #4
(Van den Berg)
Gerrit(....) Lansing
Huybert Gerritsen #8
(Van den Berg)
Gerrit Gerritsen #1
Lansing
Hendrick ten Cate
Hendrick Lansing #3
Teuntje Van den Berg #10
Elizabeth Hendricks
(ten Cate)
Conrad Van Wagenen #57
Maria Lansing #21
Jacob(....)
Casper Jacobsen
(Holenbeck)
Lysbet Caspers
Mrs. Hofmeyer(?)
Jemima
Conrad Ten Eyck #1
Hendrick Ten Eyck #8
Maria Boele
Conrad Ten Eyck #45
GARRET CONRAD
Had 15 children
Johannes de Wit #1
Catherine Ten Eyck #121
Jacob Bogart(?)
or
Jacob(?)
Cornelis Teunissen(?) #1
Johanna(....)
Catherine(..
Bogart
Guysbert(Cornelissen?) #4
James Stryker
Beeltje(....)
Bogart
Teunis Guysbertsen #11
Bogart
Guysbert Teunissen #52
Sarah Repalje
(2nd Marriage)
Bogart
Huybert
Jan(..)
Guysbert Bogart #12
Simon Jansen
Miss Jansen
Van Arsdalen
Cornelis(....)
Jannetje Symens
Van Arsdalen
Elizabeth
Claes Cornelissen
Van Schouw
Pieterje Claesen
Hans(....)
Guysbert Bogart
Hans Hansen #1
Bergen
Jean Repalje
Joris Jansen
Jacob Hansen #8
Bergen
Rynear Vegte
Repalje
Sarah Repalje
(1st Marriage)
Joris Trico(?)
Catalyn Trico
Marre Bergen #35
Jacob
Lubbert(....)
Frederick Lubbertsen (van der Kroest)
Sarah Bogart
Tomas(....)
Hendrick Tomassen
Elsie Fredericksen
Marten(....)
Trintje Hendricks
Elsie Martenssen
Jean Bodin (?) #1
Jean Bodin (?) #2
Jean Crocheron (?) #1
Isaac Bodine (?) #3
Maria Crocheron (?) #3
Elizabeth Bodine
Mary(....)
Catalyn(....)
Both were grandchildren of Sarah Bogart
→ LINEAGE CHART OF GARRET CONRAD VAN WAGNEN ←

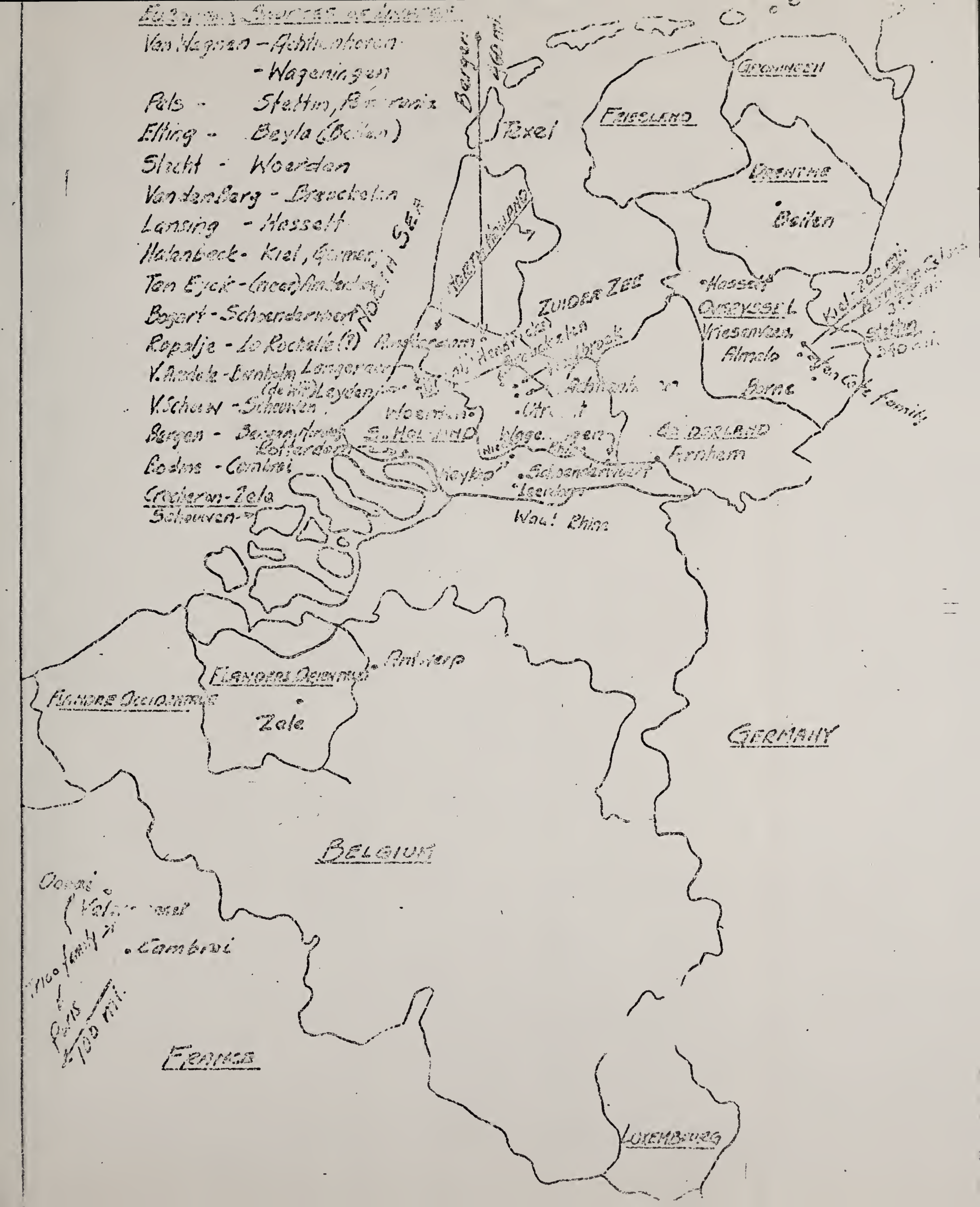
Van Wagnen - Achtienhoven
- Wageningen
Pels - Stettin, Pomerania
Elting - Beyla (Beilen)
Slecht - Woerden
Van den Berg - Breuckelen
Lansing - Hasselt
Halenbeck - Kiel, Germany
Ten Eyck - (near) Amsterdam
Bogart - Schoenderwoert
Ropalje - La Rochelle (?)
V. Arsdale - Bornholm
V. Schouw - Schouwen
Bergen - Bergen, Norway
Rotterdam
Bodine - Cambrai
Crocheron - Zele
Schouwen
Bergen
Texel
Friesland
Groningen
Drenthe
Beilen
Hasselt
Overyssel
Vriesenveen
Almelo
Borne
Stettin
Kiel
Zuider Zee
Amsterdam
Leyden
Woerden
Utrecht
Wageningen
Rhine
Heykop
Schoenderwoert
Leerdam
Waal Rhine
Arnhem
Gelderland
Flanders Orientale
Antwerp
Flandre Occidentale
Zele
Germany
Belgium
Cambrai
Paris
100 mi.
France
Luxembourg

Digitized by the Internet Archive
in 2019

https://archive.org/details/ancestryofgarret00vanw

Introduction

The publication in 1942 , of records of the family of Garret Conrad Van Wagnen, (the writer's great-grandfather), represented an initial effort to compile not only a complete record of known descendants, but also as complete a record as possible of the ancestors who preceded him, both in the Van Wagnen line itself and in the collateral lines as well. From preliminary studies of source material, it soon became apparent that so much data was available, bearing directly upon these other lines, that to attempt to include any of it with a compilation primarily devoted to the Van Wagnen family, would adversely affect the clarity of that record. It was therefore decided to include only those records which would show the Van Wagnen ancestry of Garret and to prepare as a separate and distinct record, the results of later studies of the individual families who became collateral and allied lines in his ancestry by virtue of marriage into the Van Wagnen line, or into the collateral lines. The plan as conceived and now carried out, was to include not only data of a purely genealogical nature, but also all other relevant material found.

In attempting this undertaking, the writer has been necessarily limited in the choice of source material to those volumes available in the local libraries. Fortunately, the files for the states of New York and New Jersey in state, county, town and city records, are quite comprehensive, and their value is further enhanced by substantial files of genealogical works.

Representing a spare time project, this volume is the result of about four years of research, study, and compilation. It has involved a survey of approximately 350 volumes, and the correlating of data from about 200 of them. Every effort has been made to achieve a high degree of accuracy, and to this end several checks have been made on the work during all phases of its preparation , and all source data is properly documented.

The chapters have been arranged in the chronological order in which the families became identified with the Van Wagnen line and an accompanying chart for the lineage of Garret should facilitate the reading of the volume.

As expected, this study of collateral lines has brought to light additional information of the Van Wagnen line , which could well form a part of the 1942 record. In order to augment that data, therefore, an appendix has been included with this work, covering in detail several important records not previously listed .

Great credit belongs to Mr. Gerrit Hubert Van Wagenen, the compiler of the 1884 Van Wagenen Genealogy, who named the five collateral lines of Pels, Elting, Van den Berg, Ten Eyck, and Bogart. This information has served as the foundation upon which I have built the present work. State archives, various genealogies, histories, and church records, have been of great assistance in establishing the correct family lines.

Designed primarily for the use of interested members of the family, this record is generally limited in scope to the various single lines of descent , the over-all intention not having been to attempt to compile complete genealogies of every family involved. In some cases this would involve the transcription of family records already published and would thus serve no useful purpose in making the genealogies of those families any more complete. In some cases, where only scattered records exist , an effort has beenmade to bring the data together into one record.

This volume may also be of interest to the descendants of Garret's brothers.-James Stryker, Maybert, Rynear Veghte , Jacob; and sisters,-Jemima (Schenck), and Elizabeth (Lansing).

Throughout the work , constant reference is made to certain volumes of New York State records. For the sake of brevity in the identification of these records , the reference to them in the text is by abbreviation. The abbreviations for them are listed in the following tabulation:-

Cal.....Calendar of Historical Manuscripts in the Office of the Secretary of State, Albany, N. Y.
Vol. 1, Dutch MSS, 1630-1664.
Vol. 2, English MSS, 1664-1775. A few of these are written in Dutch.
These two volumes refer respectively to 23 volumes of Dutch MSS and 80 volumes of English MSS, which, in their entirety, are sometimes referred to as 'Colonial Manuscripts'.

Docs.....Documents Relating to the Colonial History of the State of New York. 14 volumes, including one index volume. Transcriptions and translations, of documents found in Holland, London and Paris, 10 volumes, and 3 volumes of documents relating to early settlements.

Dutch MSS...Original Dutch Manuscripts. See "Calendar".

English MSS.Original English Manuscripts. See "Calendar".

L. P.....Original volumes of Land Papers in the Office of the Secretary of State, Albany, N. Y.

Trans.....Translations of the Dutch Manuscripts in Office of the Secretary of State, Albany, N. Y.
3 Volumes, referred to in O'Callaghan's "Index to Vols. 1, 2, 3, of Translations of Dutch MSS in the Office of the Secretary of State, Albany, N. Y. ".

TABLE of CONTENTS

Chapter	Title	Page
I	Pels Line	1
II	Elting Line	12
III	Slecht Line	16
IV	Vandenberg Line	27
V	Lansing Line	31
VI	Halenbeck Line	38
VII	Ten Eyck Line	41
VIII	Bogart Line	51
IX	Rapalje Line	65
X	Van Arsdale Line	78
XI	Van Schouw Line	83
XII	Bergen Line	88
XIII	Lubbertsen Line	95
XIV	Bodine Line	107
XV	Crocheron Line	114

- - - - - - - - -

~~Appendix~~

~~A.~~	~~Van Wagoner Line~~	~~1~~
~~B.~~	~~Addition to 1942 record~~	~~xii~~

CHAPTER 1

PELS LINE

The writer has seen no complete genealogy of this family, in either manuscript or published form. This is not to infer that none is in existence, however, but rather to point out that this chapter represents an entirely independent study of the family, its contents being a careful digest of data obtained from a wide variety of sources.

1. EVERT PELS.

The first documentary record of EVERT PELS (#1), the progenitor of the family in America, appears in the " Van Rensselaer - Bowier Manuscripts ", a one volume work containing transcriptions of many of the early records of the colony of Rensselaerswyck. This colony comprised a tract of land about 24 miles wide by 48 miles long, containing over 700,000 acres which had been bought from the Indians over a long period of seven years, from the year 1630, by the family of Van Rensselaer. It included land on both sides of the Hudson River, and within its limits was the site of the present city of Albany, N. Y. A condensed account of Pels is included in the "Manuscripts" volume, at pages 827-828, and the contents appear in their proper order elsewhere in this chapter.

Pels came from Stoltijn (Stettin), Pomerania and was engaged June 5, 1642, by Kiliaen Van Rensselaer, as a brewer for the colony for a term of six years. (VRB MSS, p. 6[illegible]). That same month, he sailed from the Texel, Holland, on the ship " den Houttuyn ", with his wife and servant. A "free man", he brought with him four large barrels, containing two "lasts" and eleven "muds" of malt for brewing. (Last= 82.512 bushels; mud= 3.056 bushels). (VRB MSS pp. 609-613; and O'Callaghan's "History of New Netherland", vol. 1, pp. 329, 440, 451-454). His arrival in New Amsterdam (New York City) is given as Aug. 4, 1642. (VRB MSS p. 827).

Pomerania, from which came Pels, is a northern province and duchy, bounded on the north by the Baltic Sea, on the east by West Prussia, west by the duchy of Mecklenburg, and south by the province of Bradenburg. It is a long and comparatively narrow tract of land stretching longitudinally east and west. Stettin is the center of trade, being one of the most important commercial cities of Prussia. Pomerania was originally inhabited by the Goths, Vandals and Slavs, and was first mentioned in history in 1140. It was an independent duchy, and in 1637, on the extinction of the ducal family, the electoral house of Bradenburg claimed possession, but was obliged to give up to Sweden. After the death of Charles XII it was formally ceded to Bradenburg, except a part known as Swedish Pomerania.

In explaining the name "Pels", Sylvester, in his "History of Ulster County, N. Y.", Pt. 1, p. 47, mentions that the definition of the name was furred coat or petticoat, it having been customarily quite fashionable in ancient times to trim coats and the bottoms of petticoats with fur, hence the name "Evert de Pels".

Pels established his brewery soon after his arrival, as we find that it was in operation in 1642 on the Mill Creek, at the Greenen Bosch on the east side of the Hudson, (opposite from Fort Orange), where he is said to have been living as late as 1658. (Anderson's "Landmarks of Rensselaer County", pp. 217-218, 403), and Sylvester's "History of Rensselaer County, N. Y.", p. 334).

Perhaps the earliest documentary record of Pels, after his arrival in New Netherland, is that appearing under date of June 15, 1643, in the form of a note from him to Jan Jansen Damen for the sum of 190 guilders, 19 stivers. (Guilder= 40 cents; stiver= two cents). (Dutch MSS, vol. 2, p. 60; Cal. v. 1, p. 23; Trans. v. 2, p. 120). On the same date he made a contract with Wolpert Hys, whereby Hys was to serve Pels for a period of two years at a salary of 115 guilders a year. (Dutch MSS, v. 2, p. 61; Cal. v. 1, p. 23; and Trans. v. 2, p. 121; also VRB MSS, p. 830).

On Feb. 28, 1647, he leased the farm formerly occupied by Symon Walichsz on Papscanee Island for six years at 560 guilders ($224) a year, but after building a new house and barns, transferred the lease to Juriaen Bestval and Jochem Kettelheym, Jan. 14, 1649 and turned the property over on Mar. 15, 1649. (VRB MSS, pp. 827-828; and Court Minutes of Rensselaerswyck, 1648-1652, p. 70). This island was later called Staat's Island.

Despite the fact that the greater part of the records of the colony of Rensselaerswyck were destroyed by fire in the State Capitol at Albany in 1911, many of the court records have been preserved. Two of these, dated April 2 and 16, 1648, involved a court order directing Jacob Adriaensz to serve out his term with Pels, and another record dated May 28, 1648, was a similar order directing Quirijn Cornelisz to complete his term of service with Pels during the planting, according to his agreement, under penalty of forfeiting 25 guilders ($10.00). (Van Laer's "Minutes of the Court of Rensselaerswyck, 1648-1652", pp. 25, 26, 29).

Appearing in court on July 23, 1648, Cornelis Theunisz and Pels were ordered by the court to settle their accounts within eight days, after which they were to consider and determine together, which of them was to satisfy Claes Tyssen, as a result of a beating given him by Pels, which had caused not only physical damage but also a great loss of time. Pels was cited, Oct. 8:-

1. To pay the wages earned by Tyssen.
2. To pay for one half of the peas that were mowed, and for the great damage and loss of time suffered by Tyssen.
3. To pay the fine for beating Tyssen.
4. On account of his wife's abusive language to the honorable director, when he served the complaint. (Court Minutes, pp. 32, 33).

On Oct. 15, Tyssen Declared that Pels had called him a rascal and a thief, and Pels was summoned to court Dec. 12, in regard to its order of Oct. 8. Failing to satisfy the court, Pels

was ordered, on December 17, 21, and Feb. 4, 1649, to comply with the court's directives. His wife, for her slander against the director, was judged liable to a fine of 300 guilders, but was let off with the lesser sum of "five times six guilders, cum expensis". Pels appears to have given two "summer skins" to Tyssen as full payment for wages, but as they were worth only 16 guilders, they were not acceptable, Tyssen's wages having amounted to 26 guilders. Pels was therefore given "twice twenty-four hours" in which to satisfy Tyssen's claim, and in case of refusal to pay, the director was to advance the money, subject to the restitution of double the amount. (Court Minutes, pp. 35, 47, 52, 54, 62-63).

In the court actions of Dec. 12 and 17, Pels had also been summoned on account of having wounded Thomas Jansz in the head with a piece of wood, drawing blood, and for having had his servant get the canoe of Jansz without the latter's knowledge, or consent. The director demanded condemnation according to the ordinance of the "Hon. Chartered West India Company at the Manhatans or of Amsterdam", and set the fine at 25 guilders ($10.00), all "cum expensis". On June 9, 1649, Jansz sued Pels for surgeon's fees as a result of wounds inflicted, but Pels claimed Jansz was just as guilty as he was. (Court Minutes, p. 80). Final outcome of this suit not noted.

It is not surprising, that as a result of these various disputes, Pels and the director bore considerable resentment against each other, altho it would appear that Pels was in the wrong. On June 4, 1649, they agreed to submit the legal questions between them to two dis-interested parties for decision. This resulted in an agreement whereby Pels was to restore to the director within eight days, the 26 guilders which the director had paid Tyssen, and for the loan of the money to pay the director one guilder, 16 stivers. For the notice served on Pels' servant (for taking the canoe), Pels was to pay the director 4 guilders and the court costs which were listed. Pels to pay the director 10 guilders, once, for costs and expenses and finally to pay the officer, once and for all, the sum of 10 guilders, on condition that the director would not trouble Pels or his people any more, provided that Pels paid within eight days. (Court Minutes, pp. 80, 92, 93).

In a court record dated February 23, 1649, Pels is noted as surety and bail for Jacob Aertse "waggenaer", who had participated in preventing the director from making an arrest. (Court Minutes, p. 65).

On July 3, 1649 Pels purchased a lot on Manhattan Island for which a deed was given him by Adriaen Heyser. (Dutch MSS v. 3, p. 39; Cal. v. 1, p. 46; and Trans. v. 3 p. 11[illegible]) Located on the "Great Highway" (present Broadway), it was still in his possession Oct. 23, 1654. (Dutch Records in the City Clerk's office, as copied in the Holland Society Yearbook for 1900, p. 175). This was probably the lot which he sold in 1656. (Pearson's "First Settlers of Albany County, N. Y., p. 87).

On Nov. 18, 1649 , he leased jointly with Willem Frederickse (Bout) the farm formerly occupied by Crijn Cornelis in Greenbush for which he is charged in the accounts with an annual rent of 400 guilders ($160) from May 1, 1649 until 1661, when he moved to the Esopus. (VRB MSS pp. 827-828). A renewal of the lease, dated May 1, 1653 is also a matter of record. (VRB MSS, pp. 759-761). He also leased , on November 18, 1649 , the saw and grist mill in Greenbush, formerly occupied by Jacob Jansz Flodder, for which he is charged with an annual rent of 125 guilders ($50) from May 1 , 1649 until May 1, 1658. (VRB MSS pp. 827-828).

A memorandum of farms in the colony of Rensselaerswyck, made in 1651, lists Pels' farm on the east side of the (Hudson) river, "leet aent grijne bos" (adjoining the pine grove). Valued at 400 guilders ($160) , it consisted of 20 morgens (40 acres) , and included as livestock were seven horses and eight cows. Two sawmills, valued at 125 guilders, were also listed , with a notation that 125 guilders were owed for water rights. (VRB MSS, p. 740).

From the records it is evident that Pels had not fully paid for his brewery nine years after its establishment. He and Marten Hendrickszz were cited in the court records on Sept. 7, 9, and 28, 1651, regarding the payment of 2536 guilders ($1014.40), evidenced by two notes signed by both of them. For having ignored the court's orders, his property was attached on Nov. 30. (Court Minutes, pp. 161, 162, 163, 174).

Two days prior to the attachment of his property (Nov. 28) , Pels and the others in the colony took the oath of allegiance to the Patroon. (O'Callaghan's "History of New Netherland", vol. 2 , p. 176).

About this time he must have considered removing to New Amsterdam (New York City) , as on Nov. 1 , 1651 , agents of Annetje Jans , widow of the Reverend Everardus Bogardus, leased to Pels a farm on the North River. (Dutch MSS v. 3, p. 97; Col. v.1, p. 55; and Trans. v. 3, p. 287). The farm is described as having been overseen somewhat by Bogardus, prior to his death , and was known for years as "Dominie's Bowery". The lease to Pels was for six years from May 1, 1652 to 1658 at a rental of 225 guilders and 30 pounds of butter.* It included two mares, one colt, one stallion , two milch cows and a calf , taken at joint risk of landlady and tenant. The latter might put up a new house, if not he must put a new roof on the old one. The property consisted of 31 morgens, (62 acres). (Maude Wilder Goodwin's "Historic New York", vol. 1 , p. 143. The author of that volume wonders what became of Pels , and is of the opinion he may have had to abandon the farm because of Indian troubles. In any event, it appears that he did not live there long). * Yearly.

The farm just referred to had been inherited by Annetje Jans from her first husband, Roelof Jans. She had married Bogardus in 1638. Shortly after the taking of New Netherlands by the British in 1664, the land was in the possession of the government and was

known as the "King's Farm". In 1705 the property was granted by the crown to Trinity Church Corporation and became the foundation of its great wealth. In spite of the church's title being complete, many attempts have been made by Annetje's descendants to have their claims recognized.

On January 25, 1652 , Pels' petition for the lot next to the garden of Gysbert, the tavern keeper at Greenbush, was granted. (Court Minutes p. 181).

Altho Pels is said to have lived at Greenbush as late as 1658 , and may have also lived at Albany , yet he purchased lands in 1654, in what was then known as the Esopus, a large and indefinite tract of country in which the present city of Kingston is situated. It was located about 57 miles south of Albany.

On June 10, and July 5, 1653, Pels sued Rut Arentz, a tailor, for 134 guilders, 5 stivers ($53.70) for cloth furnished him, and on June 9, 1654, he sued Jan Fransen Van Hoesen for 62 guilders ($24.80) , owed him for boards. June 16, 1654 , Pels was sued by Jan Adriaensen for the sum of 44 beavers (skins) and six otters , amounting to a sum of 400 guilders ($160) , in part payment of which Adriaensen had accepted an account against the "Honorable Company" (Dutch West India Company) , for wages earned by Pels. This amounted to 265 guilders 4 stivers, and Pels was ordered to pay the difference before the departure of the first ship for "patria" (the homeland). On Jan. 13, 1655, Pels requested the court to attach the effects of Jan Van Bremen at Katskill, before the others shall be paid, as he was owed 275 guilders , 7 stivers by Van Bremen. On April 27, he brought suit against Peter Bronck for his having removed the grain of Van Bremen which had been attached to cover the debt owed to Pels and for which no payment was made by Bronck. Pels appears to have been wounded by Claes Hendrickszz , a carpenter , as evidenced by a court record dated Mar. 16, 1655. (The foregoing records appear in Van Laer's "Court Minutes of Fort Orange and Beverwyck, 1652-1656", at pages 68, 71; 154; 155-156; 196; 214-215; 210).

He may have still had a desire to remove to New York City , as on April 29, 1655 (or 1656), he bought of Jan Pesck, a lot on the east side of the "Great Highway" (Broadway), adjoining a lot owned by Governor Stuyvesant. The record states that he was "at present residing in the colony of Rensselaerswyck". It appears that he later built a house on the lot. (Liber A, 1654-1662, p. 19 , as referred to in "Sketches of Allied Families of Knickerbocker-Viele" , pp. 110-111 ; and New York Genealogical and Biographical Record, vol. 57, p. 214).

He Sued Mattys Capito , July 5, 1655, in New Amsterdam , the record showing , however, that he was living at Fort Orange then. He in turn was sued on the same date by Jan Cornelis Clyn for 50 guilders ($20) for wages, but as he had discharged the debt by an assignment, the court declared the arrest invalid. (Records of New Amsterdam, vol. 1, pp. 328; 329-330).

Pels evidently engaged in the fur trade, for a time at least, as he is shown to have sold 2100 beaver pelts in 1657. (Early Records of Albany and Colony of Rensselaerswyck, vol. 1, p. 244).

He was the owner of two sawmills in Greenbush, and offered them for sale at auction to the highest bidder, Mar. 14, 1658. In payment for them he received a house, lot and garden in Beverwyck (Albany), from Willem Fout, who deeded the property to Pels, Mar. 17, 1659. (Early Records of Albany, vol. 4, pp. 20-21; 99-100). Pels sold this property March 14, 1661, together with a lot adjoining it on the south, which he appears to have acquired. The two lots, one with a frontage on the present Broadway of four rods, two feet, and the other with a frontage of seven rods, were eleven rods and ten rods, respectively, in depth, their eastern boundaries having been the Hudson River. They were located just south of the present Division Street. (Early Records of Albany, vol. 1, pp. 217; 292-293; and Munsell's "Collections on the History of Albany", vol. 4, p. 198). At the same time Pels had put his sawmills up for sale, he also offered his house in Fort Orange for sale, but did not sell until February 4, 1661, when it was sold to Jan Barentsen Wemp. (Early Records of Albany, vol. 4, p. 21; and vol. 1, pp. 290-291). One of his sawmills had been operated by Hans Jansz Denduys in 1651, under a contract ending May 1, 1652. (VRB MSS, p. 625).

In addition to his other occupations, Pels was also the owner of a sloop which operated between Albany and New York as early as 1658, a record dated Sept. 3 of that year mentioning the fact. (Docs. v. 13, p. 90; and Van Laer's "Minutes of the Court of Ft. Orange and Beverwyck, vol. 2, 1657-1660", p. 155; also "Early Records of Albany..... vol. 1, p. 58; and Pearson's "First Settlers of Albany", p. 87).

On Feb. 19, 1659, Pels gave his power of attorney to Captain Jan Jacobsen to secure the freedom of Maritien Symons, sister of Pels' wife (Jannetje Symens), dwelling with one Pieter Pietersen Herder in the city of New Amstel (now New Castle, Delaware). (Early Records of Albany....", vol. 4, p. 98).

July 15 and Sept. 9, 1659, Pels sued Jan Martensen for twenty beaver skins to settle an account, and the case was continued Oct. 6, when his wife appeared against Martensen's wife in an effort to reach a settlement. (Minutes of the Court of Fort Orange and Beverwyck, vol. 2, 1657-1660, pp. 205, 210, 220).

An exodus was made from Greenbush by several of the inhabitants, a few years after its settlement, and Pels joined with the others and squatted on the north side of the Rondout (or Ponckhockie) Creek in the Esopus. Some time after that he went to the place which was later called Wiltwyck where he kept a store for a few years and then returned to the Rondout where he continued his trade. (Sylvester's "History of Ulster County", Part 1, p. 47).

His store , or trading post, on the future Wiltwyck , was located near the fort on the "Strand" , and was a great gathering place for the river men. (Sylvester, Part 1, p. 44).

A study of correspondence between various persons,living in the Esopus, with the Governor of New Netherland , reveals Pels' part in an unfortunate episode with the Indians. On the night of Sept. 20, 1659, a group of Indians, eight in number, having worked all day shelling corn for one of the settlers , succeeded in obtaining a quantity of liquor upon which they became drunk. Late that night they made their way to the stockade , and created a disturbance of such proportions that many of the settlers became enraged. A group of eight or ten of their number , including Pels, attacked the Indians with musket and axe , seriously wounding several, and drove them off. All evidence points to the fact that the settlers were entirely unjustified in their actions, and it is not surprising that it brought to a head the long smoldering hatred and distrust which had existed for a long time between the Indians and the settlers. Ensign Smith, in command of a detachment of soldiers which had been sent to protect the settlement , made plans to return immediately to New Amsterdam with his men, as a protest against the unwarranted action of the settlers. He was prevented from doing so, by a ruse, and sent a messenger , Sept. 21, to New Amsterdam with news of the outbreak.

The messenger was escorted to the river by an armed guard of several men, including a few villagers , one of whom was Pels' son. On their return from the river they were set upon by the Indians, most, if not all of them, being captured. Besieging the fort with about 500 men and failing to capture it after several days, the Indians in retaliation for the attack of September 20 , forced eight or nine of their captives to run the gauntlet. Those who survived this and subsequent beatings were burned at the stake. Five escaped this fate, two by ransom, one by exchange,one by escape, and Pels' son who was later adopted by the tribe. (See Docs. v. 13, pp. 114-121). Pels' son is said to have taken an Indian wife, and to have had children by her. Efforts to induce him to return to his own kind, were unavailing. (Docs. v.13, p. 143). In commenting on this, Sylvester, in his "History of Ulster County, Part 1, p. 39, adds that by virtue of Pels' son having lived with the Indians, and having taken one of their number for a wife "the Pels' have as much to boast of as the descendents of Pocahontas".

On Sept. 29, Pels and others sent their version of the cause of the troubles to Gov. Stuyvesant, as did also Ensign Smith , in which he told of the participation of Pels and the others in the attack on the Indians. (Dutch MSS v. 13, p. 39; Corr. v.1, p. 280; and Docs. v.13, pp. 116-117; 114-115).

Various histories have included in their contents , earlier accounts of the foregoing. Among them are Schoonmaker's "History of Kingston, N. Y.", pp. 12, 13; Sylvester's "History of Ulster

County, N. Y.", Part 1, pp. 38-39; and O'Callaghan's "History of New Netherland", vol. 2, pp. 394-397).

On April 1, 1660, Pels was appointed one of the chief officers of the watch in the settlement of Greenbush. (Docs. v. 13, p. 156).

Feb. 2, 1661 a deposition was made by disinterested parties, to the effect that Jacob Jansen had agreed to obtain 7 or 8 morgens (14 or 16 acres) of land for Pels, to replace a like amount which, by virtue of an error, had been included in Jansen's share of a partnership arrangement. (Docs. v. 13, p. 192; and Early Records of Albany, vol. 3, p. 54).

The first indication of Pels' intention to remove permanently to the Esopus, appears in a record dated March 22, 1661, in which he gave his bond for a debt owed to Jan van Gutsenhoven, having stated at the time that he proposed to transfer his residence from Rensselaerswyck to the Esopus, and the actual time of his removal can be determined from a record dated Oct. 1, 1661, in which reference is made to the fact that in an agreement made between Pels and Jochem Wessels, in April, Pels was then about to leave for the Esopus. (Early Records of Albany, vol. 3, pp. 60-61 and 123).

Howard Hendricks, in his "History of Kingston, N. Y.", gives a brief history of the early events leading up to the settlement of the Esopus region. The Dutch West India Company had set up trading posts at Manhattan (New York), Fort Orange (Albany), and at intermediate points, including Atharkarton, (an Indian name), at the mouth of the Rondout Creek. Later called Esopus, it was a vast wilderness, part of it covering the site of the present city of Kingston. Until 1638, when control of trade passed out of the hands of the company, and Gov. Kieft came, relations with the Indians had been friendly. Kieft, however, urged a war of extinction against the tribes, which resulted in the whites being driven out of the Esopus for a period of two years from the winter of 1643. The first permanent settlement was made in 1653, on land given the colonists by the Indians. Gov. Stuyvesant, who had succeeded Kieft, insisted that a stockade be built around the village, which by May, 1658, had a population of 60 or 70 whites. (This number has been set at about 70 to 80 by the Columbia University Press, in its "History of New York, vol. 1, p. 314). The settlement was destined to become the old village of Kingston, now the upper business section of the city. The area bounded by North Front, Green and Main Streets, and Clinton Avenue, was the site of the original stockade.

Pels and his wife were received into the church at Kingston, April 15, 1661, by attestation from Fort Orange. (Sylvester's "History of Ulster County", Part 1, p. 62). For his share in the expense of building a parsonage for the new minister, he was taxed 90 guilders ($36), for the 36 morgens (72 acres) of land of which he was the owner, Nov. 1661. (Sylvester, p. 62, Part 1).

The settlement at Esopus was given municipal powers and the name Wiltwyck , May 16, 1661. Pels was designated by the charter as one of the three schepens (magistrates), who with the schout , (Sheriff), constituted the first court of justice in Ulster County. (Docs. v. 13, pages 196-198 ; O'Callaghan's " Register of New Netherland" , p. 71 ; Schoonmaker's "History of Kingston, N. Y.", pp. 25; 503-506 ; Brodhead's "History of the State of New York" , p. 690; Sylvester's "History of Ulster County, N. Y.", Part 1 , p. 46). Pels was also a schepen in 1665, and grain measurer in 1669, with headquarters at the Rondout. (Holland Society Yearbook for 1897, p. 127).

The Dutch records of Kingston, 1661-1684 , were translated several years ago, and according to a survey made by the Historical Records Survey of the Works Progress Administration, they are in the County Clerk's office in Kingston. It appears that these translations were not satisfactory, and a new translation was begun in 1912 , at which time the records of the years 1661-1664, were published in vol. 11 of the New York Historical Association Proceedings. Frequent mention is made of Pels throughout the records, and a few of the more important ones are included here.

Pels was sued, Feb. 7, 1662, by Dirck Ariaensen, for 27 days wages for harvesting and threshing , and by Jan Aersen for sixty schepels (about 45 bushels) of oats. Defendant was ordered to satisfy both claims. The case with Ariaensen was continued Feb. 28, when Pels claimed he had paid part, and was therefore ordered to pay the balance. On the same day he sued Geertruyt Andrissen for 500 guilders, 18 stivers (about $200), "heavy money", and she introduced a counter bill, claiming their accounts did not agree. They were given two weeks to square their accounts. (Dutch Records, pp. 16, 23, 24).

On Nov. 1, 1662 , Thomas Chambers sued Pels for 700 guilders in wheat and oats, for a house, barn and lot. Admitting the debt, Pels offered to pay the following winter. Immediate payment was demanded, to which Pels offered an alternate plan of settlement , involving the return of the property for which he would pay a moderate rent , less his outlay for repairs. Following Chambers' refusal to take back the property , Pels was ordered by the court to pay. (Dutch Records, p. 40).

He mortgaged his lands near Wiltwyck, Feb. 15, 1663, and his house there, which were free and un-incumbered, pledging his person and goods, when he borrowed 1000 guilders ($400), in corn and beaver value for two years at interest of 120 guilders a year , from the estate of the minor children of Mathys Jansen. (Dutch Records, p. 64).

He sued Aert Hartensen Doorn, Jan. 29, 1664 , for 256 guilders, "heavy money". The defendant claimed he had a counter bill, and the court ordered the parties to adjust their accounts. In a later court session, Feb. 12, Pels submitted a revised claim of 541 guilders, 17 stivers (about $217). They were ordered to submit their accounts to two of the citizens for adjustment. A default was entered against Doorn, Mar. 11 , when he failed to make his appearance in court. (Dutch Records... pp. 122, 125, 133). On the latter date, Pels also sued Juriaen Westphael for 262 guilders 5 stivers, "heavy money", per an obligation of Dec. 28, 1663 plus 20 guilders, 4 stivers in "seewan" (wampum) for scrivener's wage, and 2 guilders, 8 stivers, "seewan" for the court messenger. Defendant was ordered to pay. (Dutch Records, p. 133).

Pels and others , as commissioners of Wiltwyck , and Roeloff Swartwout , schout of Esopus, sent a report dated Jan. 24, 1663 , to Gov. Stuyvesant , regarding the evils of selling liquor to the Indians. (New York Genealogical and Biographical Record, vol. 27, p. 192 ; and Docs. v. 13, pp. 237-238).

On Dec. 3, 1663, Pels was one of seven, composing a military court , who signed an order directing that the fort at Wiltwyck be put in a suitable state of defense. (O'Callaghan's "Documentary History of the State of New York", vol. 4, p. 50 in the quarto edition of 1851 and p. 95 in the octavo edition of 1851).

The writer has not had the opportunity to examine records subsequent to 1663, those being the ones said to be in Kingston , and never published.

Efforts on the part of several inhabitants of the village of Kingston to obtain local government were met with a stern refusal by the English Governor in 1684. He imposed fines on all those involved. Thomas Chambers, the prime instigator, was given a jury trial, Pels having been one of the jurors chosen, so he evidently had no part in the criticism leveled at the English administration of the affairs of the village. (B. M. Brink's "Olde Ulster", vol. 2, pp. 257-263).

From baptismal records of the Kingston Church , the name of Pels' wife is given as Jannetje Symens, indicating that her father's name was probably Symon. Schoonmaker however, in his "History of Kingston", p. 485, and the New York Genealogical and Biographical Record, vol. 64, p. 158, both give her name as Jannetje Schepmoes.

Inasmuch as the passenger list of the ship on which Pels and his wife were passengers, makes no reference to any children , it can reasonably be assumed that all their children were born in New Netherland. One was probably born at Albany, one in New York and two in Kingston. It seems possible that all the others were born either at Albany or Greenbush. Albany Church records, which would be of great value in a search such as this , are no longer

in existence for the years prior to 1683. A careful examination of material from a number of sources, indicates that Pels was the father of at least nine children, of whom three were sons. One of the six daughters was:-

5. CLARA PELS, born probably in New Amsterdam and baptised there Sept. 10, 1651. Father's name given but not the mother's. (Collections of the New York Genealogical and Biographical Society, vol. 2, p. 30). She married Gerrit Aertsen (#6 in the Van Wagenen Genealogy), but I find no record. It was probably about 1670. The date of her birth is incorrectly given as 1649 in the lineage of James Breath, appearing in the 1905 Genealogical Record of the St. Nicholas Society of the City of New York, p.24. Information of her descendants appears in vol. 10 of the New York Genealogical and Biographical Record; the 1884 Van Wagenen Genealogy; and the writer's own compilation of 1942. She was living May 14, 1721, when she was a witness at a baptism in Kingston. (Hoes' "Register of the Old Dutch Church, Kingston, N. Y.", page 135, baptism # 2877).

Her mother, Jannetje Symons, was living October 19, 1684, at which time she witnessed the baptism of a grandson in Kingston. (Hoes' "Register.....", p. 23, baptism #593).

CHAPTER II

ELTING LINE

Material for this chapter has been obtained from a number of sources. Perhaps the first published information of the Elting family was that which appeared in J. G. Bergen's "Register of the Early Settlers of Kings County, L. I." (1881) at page 108. The most complete record, insofar as the first three generations are concerned, was that appearing in the New York Genealogical and Biographical Record, vol. 16, (1885), pages 25-31. Compiled by Mr. Gerrit H. Van Wagenen,- the compiler of the Van Wagenen genealogy,-the records for the three generations were complete except for Aaltje Elting (2nd. generation), and Margretjen Elting (3rd. generation, the fourth child of Aaltje's brother, Roelif Elting). This Margretjen died young, and a sister, born a few years later, bore the same name. Records of Aaltje and her descendants are included in the New York Genealogical and Biographical Record, vol. 10, pp. 88-89; 107-110, in connection with records of the Van Wagenen family, compiled by Mr. Van Wagenen, and in his "Van Wagenen Genealogy", published in 1864. Schoonmaker, in his "History of Kingston, N. Y.", (1888), pp. 479-480, records the first two generations, and Clarence J. Elting, writing in B. M. Brink's "Olde Ulster", vol. 3, pp. 150-156; 176-183; 214-217, records the first two generations complete, with some lines extending as far as the eighth generation. Mr. Ralph LeFevre, in his "History of New Paltz, N. Y.", (1903), makes frequent mention of various members of the Elting families, and pages 481-498, prepared by Mr. Jonathan Hasbrouck, include information of the first two generations, and of one line descending from the second generation.

Gustav Anjou, in his "Ulster County, N. Y. Probate Records", (1906), vol. 1, p. 39, and page 90 of vol. 2 (1916) of the genealogical records of the St. Nicholas Society of the City of New York, include information of the first two generations.

Later entries in this chapter will show that the first of the name, of whom we have a record, was ROELIF ELTEN, and his wife, AALTJE. There appears to be no information concerning their parentage. They were residents of Switchalaer, a dependency of Beyla, Province of Drenthe, Holland. The current spelling of the name of the village is Zwiggelt. (New York Genealogical and Biographical Record, vol. 65, p. 4).

They were the parents of at least three children, all having been baptized at Beyla. These children are classified as first generation, the parents apparently having never left Holland.

Marie Elting, born Feb. 28, 1630.
Barbert Elting, born Dec. 18, 1631.
1. JAN ELTING, born July 29, 1632, old style. Progenitor of the family in America. He is listed as #1 in genealogical records compiled by Mr. Van Wagenen and Mr. Elting. His brother and sister probably remained in Holland.

JAN ELTING is said to have been in New Amsterdam (New York), prior to 1657 , altho I find no evidence to support this statement which appears in the St. Nicholas Society's records. The first documentary record of his residence there , is in the form of a note, dated Aug. 27, 1662, issued by him in favor of Nicholas Meyer. (Holland Society of New York, yearbook for 1900, page 148, being a copy of a Dutch record in vol. 2 of the Register of Salomon LaChair, a notary public in New Amsterdam). He is said to have left the rights to the farm in Holland to his elder brother.

Church records of the Reformed Dutch Church of Flatbush , L. I., include the record of payment of 25 guilders ($10.00), to Jan for carpenter's work on the church there, in 1663. On November 27 1663, he bought from Derrick Jansen , a farm and building plot in Flatbush, on the east side of the road. (Flatbush Records, liber B. page 150). This is probably the record referred to in the Holland Society Yearbook for 1922-1923, p. 255 as being the first documentary evidence of his residence in New Netherland. The same source , as well as Mr. Elting's account in "Olde Ulster", both refer to a record at Albany, dated Sept. 6, 1675 , in which commissions were issued to Jan and four others to hold a court of sessions at Kingston. Records of the St. Nicholas Society and Mr. LeFevre's volume, incorrectly give 1665. This was the year of his removal to the Esopus country (Kingston), from Flatbush,-title to his property at the latter place not having been clear. (Suit involving this property, dated June 12, 1665, recorded in Flatbush records, liber D, p. 35).

Jan acted as attorney for Jan Subberingh in 1673 , in regard to the collection of 360 guilders for payment for a horse. (Olde Ulster, vol. 3, p. 150).

Altho there appears to be no record of his marriage , yet he was probably married prior to May 26, 1677 , when he and Jacomyntje Slecht signed, as witnesses, an agreement between certain Indians and Louis DuBois and associates , in which the Indians were to sell, and the others were to buy, certain lands in Ulster Co. It is known that he married Jacomyntje, and there is no reason to suppose that she signed a legal document of this nature , as an unmarried woman. (The copy of the original agreement is recorded in vol. 13, pp. 506-507 , of "Documents Relating to the Colonial History of the State of New York", and a copy is also included in LeFevre's "History of New Paltz", pp. 11-13). On Sept. 15, 1677 , Jan signed as a witness, the final conveyance of the land, in which the Indians acknowledged full payment. (A copy of this record appears in "History of New Paltz", pp. 13-14. Copies of these records also are included in Brink's "Olde Ulster", vol. 1, pages 105-110). [illegible],000 acres were involved in the transaction.

For some reason, Jan returned to Holland in 1679. In a testamentary disposition , dated Sept. 30 , of that year, in which he stated that "Being now ready to depart for Holland, and considering the perils of the sea, the injuries from Heaven, the certain-

ty of death.....", his wife was directed to remain in full possession of lands and all other property, she to pay to the children by her marriage with Gerrit Roosken, then deceased, 200 schepels of wheat. Jan to do the same should he be the survivor. Land which he owned at Hurley (three miles from Kingston), was to remain mortgaged as security for the wheat. (Anjou's "Ulster County Probate Records", vol. 1, p. 39). He is said to have become a very prosperous farmer.

On Oct. 10, 1679, he took great pains to establish his identity, at which time five residents of Flatlands, L. I., - all of them having been natives of Frerthe, in Holland, testified as to the identity of Jan Elting from the same place, and that he was a son of Roelif and Aeltje Elting. They further testified that Jan was then a resident of Kingston, in Ulster County. On October 13, Jan testified before Secretary Nicolls, as to the affidavit of Oct. 10, and as to his being the son of the parents named in that document. (English MSS, v. 22, pp. 135-136; and Cal. v.2, p. 30). Bergen, already referred to, gives the name of Jan's mother as Stryker Lebring. His information was derived from the foregoing records, and it is difficult to explain, therefore, his error in identification.

It appears that Jan traveled via England to Holland, and on Jan. 20, 1680, soon after his arrival, he obtained duly certified copies of the records of birth and baptism of not only himself, but also of his brother and sister, showing them to have been the children of the aforesaid Roelif and Aeltje Elting. (Anjou's "Ulster County Probate Records", vol. 1, p. 39). The names and the corresponding birth dates have been listed near the beginning of this chapter.

A petition dated in 1684, asking for local government, bore his signature and as he was one of the civil officers, he was fined more than the majority. (Olde Ulster, vol. 2, pp. 257-263).

On May 7, 1685, he purchased 35 acres of land, in several lots, located in Hurley, in which village he lived. (Sylvester, "History of Ulster County, N. Y.", part 1, p. 147). He was one of the partners, in the same year, with Gerrit Aertsen (father of Aert Gerritsen Van Wagenen who married Jan Elting's daughter), in the purchase of lands in Dutchess County, an account of which was included in the writer's 1942 compilation of records of the family of Van Wagenen. Other accounts of this land purchase are included in Frederic Kip's "History of the Kip Family in America", pp. 327-331; Howard H. Vedder's "Historic Old Rhinebeck"; Elwin M. Smith's "History of Rhinebeck"; James H. Smith's "Hist. of Dutchess County, N. Y."; Philip H. Smith's "History of Dutchess County, N. Y."; the 1884 Van Wagenen Genealogy; and numerous other sources. Jan's share of the property was purchased by Gerrit Aertsen from Jan's heirs in 1713. (E. M. Smith's "Hist. of Rhinebeck").

On Dec. 12, 1689, Jan, with several other residents of Hurley, signed a pledge of support for their representatives in anything they did for the "welfare and allegiance of our majesties, King William and Queen Mary, for the benefit of our country and the advancement of the Protestant religion". (O'Callaghan's "Documentary History of the State of New York", vol. 2, p. 46 of the 8vo. edition of 1849, and p. 27 of the 4to. edition of 1850).

By his last will, which apparently was never recorded, Jan devised to his five children, half of his estate, and to the nine children of his wife,-the five by his existing marriage, and four by his wife's previous two marriages,- he devised the other half. One of the five, Aaltje, had died before April 21, 1701, and her share reverted to her only son, Gerrit Van Wagenen (#42 in the Van Wagenen genealogy). Jan died prior to Aug. 2, 1729, when the above heirs executed a quit claim deed granting the children of one of Jacomyntje's daughters by a previous marriage,- then deceased,- 1/9 part of lot #5 in Dutchess County, and 1/18 part in the meadow called "Jacomyntje's Fly". (Anjou's "Ulster County Probate Records", vol. 1, p. 40). The meadow had been an outright gift from the Indians to Elting and his partners, in the deed of 1685, previously referred to, and by which the partners had obtained possession of some 1500 acres of land in Dutchess County.

Jan's wife, JACOMYNTJE SLECHT, whom he married about 1677, had been twice married before her marriage to Jan. Data relative to these earlier marriages is included in the chapter on the line of Slecht.

Jan was the father of five children, three sons, two daughters. One of the latter was:-

5. AALTJE ELTING, second generation, may have been the eldest of the five. There appears to be no record of her birth or baptism. She married, Oct. 6, 1693, at Kingston, Aert Gerritsen Van Wagenen (#52 in the Van Wagenen Genealogy). She married second, after Aert's death, Barent Van Benthuysen, April 30, 1699. She died before April 21, 1701, on which date Barent married Jannetje Gerritsen (Van Wagenen), a sister of Aert Gerritsen, first husband of Aaltje. (Hoes, "Register of the Old Dutch Church, Kingston, N. Y.", pp. 511, 514, 517).

Aaltje Elting and Aert Gerritsen had but one child, a son:-

GERRIT VAN WAGENEN, (#42 in the Van Wagenen Genealogy), born Jan. 23, and baptized Jan. 24, 1697. (Hoes "Register....", page 49). Gerrit's descendants, in the single line of descent to Garret Conrad Van Wagenen (#94), and through the year 1942, were included in the record prepared by the writer in 1942. Additional descendants of Gerrit were included in the Van Wagenen Genealogy of 1884.

CHAPTER III

SLEGHT LINE

The first of this family in America, appears to have been

1. CORNELIS BARENTSEN SLECHT. The year of his arrival has not been definitely established, altho Chambers, in his "Early Germans of New Jersey", pp. 497-498, states that Slecht arrived in New Amsterdam (New York City), in April, 1662, having been a passenger on the ship "Hope". The records which follow will show that such a statement cannot be accepted as fact, as his name has been noted in a Kingston record of 1655. The remote possibility that he may have had occasion to return to Holland,- after having settled in New Netherland, and that his subsequent re-entry at New Amsterdam may have occurred in 1662,-is suggested by an entry dated July 25, 1662, which indicates that he was in the city at that time. (Holland Society of New York Yearbook for 1900, page 146). On the other hand, a judgment was obtained against him by Jeronimus Mohingh, for the rent of a farm at Esopus (Kingston) in April, 1661, the exact month and year he is said by Chambers to have arrived in New Amsterdam. The record would appear to indicate that Slecht was at the Esopus at the time. (Dutch MSS, v. 10, p. 121; and Cal. v.1, p. 236). Chambers' brief account of the family appears to be unreliable concerning Slecht's descendants.

Of Slecht's mother, there is no information. It can reasonably be presumed, however, that his father's name was Barent from which, by the ancient Dutch custom, the name of his son appears as Cornelis Barentsen, meaning "son of Barent".

A volume titled "Sleights of Sag Harbor", by Mr. Harry D. Sleight, is not available to the writer. However, a review of its contents, appearing in the New York Genealogical and Biographical Record, remarks that the genealogical data is relatively brief, the work being to a large extent historical.

This chapter is a digest of data obtained from numerous volumes of source material, most of them, by their very nature, having been accepted as authentic by the genealogical profession. Altho there may be other accounts, published or unpublished, concerning the life of the founder of the family in America, this is an independently compiled record.

There is evidently no record of birth of CORNELIS BARENTSEN SLECHT. However, from the fact that his son Hendrick was married in 1666, it is not improbable that the father may have been born as early as 1620, and doubtless married prior to his removal to New Netherland. In a record dated 1663, and to which reference is made later in the chapter, he described himself and his wife as old people, suggesting the possibility that he may have been born earlier, even, than 1620.

Slecht and his wife, TRYNTJE TYSEN BOS(CH) , both came from Woerden , located in the province of South Holland , on the old Rhine, 18 miles east-southeast of Leyden. (Anjou, "Ulster County Probate Records", vol. 1, pp. 32-33; and Hoes' "Register of the Old Dutch Church at Kingston", p. 507). His wife's name suggests that her father's name may have been Tys or Thys. Others of the name Bos or Bosch were fairly numerous in New Netherland, but the writer has not determined Tryntje's connection, if any , with the other families. LeFevre, in his "History of New Paltz", p. 482, states that Tryntje's last name was Tynebrouck, which is not consistent with documentary evidence.

The earliest record of Slecht is a reference to his wife who was the village midwife at Esopus (later Kingston) in 1655. (See O'Callaghan's "New Netherland Register", p. 128 ; and Sylvester's "History of Ulster County", Part 1, p. 31; also Schoonmaker "History of Kingston, N. Y.", p. 6).

A court record dated April 4, 1656, reads as follows:-

There appeared in court, Cornelis Barentsz Slecht, hereby to certify at the request of Joffrou Johanna de Hulter, widow of the late John de Hulter, that it is true that he, the appearer, during the late troubles with the savages, on the part of the aforesaid Joffrou , has delivered , on account and for the behoof of Thomas Chambers, first, 150 lbs. of butter, 5 schepels of flour and four traces. Also that one Pieter Bruynen ,-also a servant of the said Joffrou,- and he, have attended and served at the house of the said Chambers, as is confirmed and corroborated by the aforesaid Bruynen, also appearing here, and that he served in the capacity of a cook at the house aforesaid. May God Almighty help him, the appearer. Done on the date above written. (Van Laer's "Minutes of the Court of Fort Orange and Beverwyck", vol. 1, p. 262).

Troubles with the Indians at Esopus , made it necessary for the villagers to send a letter,- to which Slecht was one of several signers-asking the council of New Netherland for assistance in protecting the citizens. Dated May 18, 1658, this letter was followed by an agreement signed on May 31 by Slecht and eight others on behalf of the inhabitants , in which they agreed to remove their scattered dwellings and form a village and stockade as protection against the Indians. (Docs. v. 13, pp. 78-79; 80-81 ; and Schoonmaker's "History of Kingston, N. Y.", p. 8).

On Oct. 15, 165 , proposals were made to the Esopus Indians, in an effort to end the troubles with them. In making the proposals , several grievances were listed , among them being that the Indians had compelled Slecht to plow their land for corn, and had threatened to burn his house in case he should refuse , taking a firebrand for that purpose and running up under the roof to fire the barn. (Docs. v. 13, pp. 93-95; and Schoonmaker's " History of Kingston, p. 10).

An account of the troubles with the Indians in 1659, has already been given in the chapter on the Pels family. A letter with no date other than 1659 , written by Slecht to director Peter Stuyvesant, tells of the settlers being besieged in the fort, and adds that no blame should be attached to Ensign Smith, who had in his charge a company of soldiers which had been sent to protect the village. (Dutch MSS, v. 13, p. 40; and Cal. v. 1, p. 288). In the attack on the fort, (an aftermath of an attack by some of the villagers on the Indians), Slecht's son, Jan, was killed. This is established from the contents of a letter signed by Slecht and others, and addressed to Stuyvesant, in which they asked that the soldiers (who had previously been ordered to return to New Amsterdam) remain to help protect the village. (Docs. vol. 13, pp. 118-119). A biographical sketch of a descendant of Slecht , which appears in James H. Smith's "History of Dutchess County", p. 473, gives the name of Slecht's son as Abram Vosburg Slecht.. This is an error, Abram Vosburg having been the full name of another who was also captured and killed,-as Smith has it,-by being burned at the stake. He is correctly identified by A. J. F. Van Laer, in an article appearing in the Dutch Settlers Society of Albany, N. Y., Yearbook for 1924-1925, pp. 6-7. Schoonmaker's "History of Kingston, N. Y.", pp. 11-13; Sylvester's "History of Ulster County, N. Y.", Part 1, pp. 38-39; and O'Callaghan's "History of New Netherland", vol. 2, pp. 394-398, include detailed accounts of the Indian uprising. Schoonmaker has it that a daughter of Slecht was captured by the Indians, and that she married a young warrior who is said to have settled later in Marbletown. (Page 42).

The settlement at Esopus, being in need of a minister, a petition signed by Slecht and twelve others on Aug. 17 , 1659 , was sent to the Director-General requesting the appointment of Rev. Hermanus Blom. The post was accepted Mar. 4, 1661. (Docs. v. 13, pp. 103-104; Dutch MSS v. 14, p. 12; Cal. v.1, p. 295; and Brink "Olde Ulster", vol. 2, pp. 16-17). Slecht and his wife had been accepted into the church and participated in the first administration of the Lord's supper Dec. 26, 1660. (New York Genealogical and Biographical Record, vol. 31, p. 163; and Sylvester 's "History of Ulster County, N. Y.", part 1, p. 63). The new minister boarded with them until the parsonage was built.

Slecht may have had interests in New Amsterdam as well as at the Esopus where he lived. A debt of 2011 florins ($804.40), owed by him as of Sept. 3, 1659 and payable in May 1660 , is recorded in charge of Francois Boon. (Pernow's "Minutes of the Orphanmasters of New Amsterdam", vol. 1, p. 107 ; and Holland Society Year book for 1900, p. 117).

A charter was granted the village May 16, 1661. Naming the place Wiltwyck (later Kingston) , it designated Slecht as one of three schepens (magistrates) who , with the schout (sheriff), had taken their oath of office May 5. (Docs. v. 13, pp. 196-198; O'Callaghan's "Register of New Netherland", p. 71; also Sylvester's "History of Ulster County, N. Y.", part 1, p. 46 ; and Brodhead's

"History of the State of New York", p. 690). It should be noted that Slecht and the others constituted the first court of justice in Ulster County. An examination of the court records shows that Slecht held his office for one year. He was nominated for the same office in March 1663 (Docs. v. 13, pp. 238-239) and Mar. 27, 1664, (Dutch Records of Kingston, 1661-1664, pp. 138-139, in New York Historical Association's Proceedings, vol. 11, 1912). A full transcription of the charter of Wiltwyck appears in Schoonmaker's "History of Kingston, N. Y.", pp. 503-506).

Slecht was taxed in November 1661, 160 guilders($64) for the 64 morgen farm of Madame de Hulter , and 62 guilders, 10 stivers, (about $25) , for his own land, unsurveyed , as his share of the total tax which was raised to pay for the new parsonage built for the new minister. Payments were made in wheat, half "directly", and half "next summer". The tax was based on 2-1/2 guilders per morgen (two acres), of all plow and pasture land. (Sylvester, p. 62, part 1).

Slecht was arrested Dec. 12, 1662 , on order of Jacobus Vis, who charged that said Slecht owed him 64 guilders ($25.60) , for which he demanded payment either in beavers (skins) , or corn at beaver price. Admitting the debt, Slecht requested time until the next harvest, but Vis asked immediate payment , in consideration of the fact that he intended to go to Holland. Slecht was ordered to pay. (Fernow's "Records of New Amsterdam", vol. 4, p. 170).

Dutch records of Kingston have been translated. The original translation, in three volumes, titled "Deed Records, Translations of Dutch Records, 1661-1684", was made by Dingman Versteeg in the period from 1896-1898. These original translations are said to have not been entirely satisfactory , and a start was made in 1912 on a revised translation , by the New York State Historical Association in volume 11 of its "Proceedings" , published in that year. Covering the years from 1661-1664, and designated as Part One, this initial work was also the last. The writer has not had the opportunity to examine the original translations , said to be in the office of the County Clerk at Kingston, none of which were published. Of the records published by the Historical Association in its volume 11, some are included at other points in this chapter, while the balance are grouped here as a unit. Many records, of relatively minor importance, have been omitted.

On Mar. 28, 1662, Slecht brought suit against Geertruyt Andrisse for payment of 146 guilders, 10 stivers ($58.60) in "heavy" money", which he had advanced for building a bridge. Admitting the debt, the defendant stated she had a counter claim and was ordered to produce it at the next session. In another suit, dated April 18, Slecht demanded payment of 107 guilders , 10 stivers , ($43) , which may have been the balance owed him after deduction of the counter claim. The defendant was ordered to pay within six weeks. (Pp. 25-29).

In order to secure payment of wages earned for brewing , it was necessary for Slecht to bring suit against Juriaen Westvaelt, April 18, 1662, for 114 guilders ($45.60), in"heavy money". The defendant was ordered to pay within six weeks. (p. 29).

Slecht was sued November 28, 1662, by Pieter Couwenhoven, for 437 guilders ($174.80) in corn for wages earned per an obligation made out to Albert Jansen. Slecht declared that he had paid, that it was not cancelled, and asked the plaintiff to show his assignment and power of attorney for the same. The court ordered Slecht to furnish written proof of his having paid the obligation. (Page 43).

In consequence of a recent sentence (not identified) against Slecht, Tyrick Claesen de Wit and Sergeant Christiaen Nissen, who had become sureties for him in the amount of 1900 guilders ($760) in beavers, instituted an action against him, January 9, 1663, by authority of a power of attorney from Governor Stuyvesant. They had found no corn forthcoming and asked the court to appoint one or two guards to watch the corn. They were appointed to watch the quantity threshed and delivered and also to receive and store the same , and if it did not then suffice , they were authorized to appoint two men to watch the corn. (p. 52).

An ordinance was passed Aug. 4, 1663 , which forbade any person from going out from the fort to mow , without the consent of the Captain Lieutenant and a sufficient convoy. For violating the decree, Hendrick Slecht, one of Slecht's sons , was brought into court on Oct. 9. Representing his son, Slecht maintained he was not obliged to obey the local court and asked permission to take the case to the Supreme Council. Over-ruling him, the court ordered him to pay his son's fine. On the same day the schout cited nine of Slecht's farm hands for the same violation, and again the argument put up by Slecht , in their defense , was to the effect that the local court did not have jurisdiction. The men were ordered to pay, but evidently failed to do so and were jailed. They were set at liberty Nov. 1 , when Slecht settled with the schout for them. (pp. 75; 76-77; 99-100).

Many of the inhabitants were cited Jan. 29 , 1664, for failure to pay the balance of the minister's salary for 1661-1662 . Slecht was in arrears in the sum of 108 guilders ($43.20), "heavy money", and was ordered to pay, as he admitted the debt. (pp.117-118).

On the same date he was sued for payment of 131 guilders, 10 stivers ($52.60) "light money" , for goods bought from the estate of Jan Albertse, and for 208 guilders, 10 stivers ($83.40) "light money" for one half of the lot purchased from Albertse for and on account of Jeronimus Ebbingh, for whom he was the surety, and who had evidently failed to pay Admitting the debts, Slecht was ordered to pay. (p. 121).

It appears that Slecht went in quite heavily for farming. On the assumption that certain court records all refer to the same farm, it may be that he had leased property as early as 1659, from Jeronimus Ebbing, who instituted a suit against Slecht, Mar. 28, 1662 for five years rent in the sum of 2000 guilders ($800), for the use of his farm. He asked for permission to enter upon the farm and for a restitution of everything according to lease. Slecht claimed he had paid 556 guilders, but Ebbing demanded a copy of the account and announced the seizure by the Court Messenger of the threshed and unthreshed grain, the brewing kettle and appurtenances, and the remaining cattle, which were in the possession of Slecht on Mar. 29. In view of the fact that Slecht had not lived on the farm for the full term of the lease and that poor crops were responsible for his failure to pay, the court directed that he pay the rent for the current year instead. As he had asked for time for the payment, he promised to pay 1000 guilders within seven months, and agreed to pay one-sixth at once, under penalty of judgment by default. The case was continued on the 29th., at which time Ebbing said he would not oppose the threshing or sowing, but asked that the Commissaries supervise the same to see that the overplus grain be not neglected. (Dutch Records of Kingston, 1661-1664, pp. 26, 28, in the New York Historical Association's Proceedings, vol. 11 (1912).

Perhaps as a result of these difficulties, he secured a patent for 25 morgens (50 acres) of land at the Esopus Dec. 7, 1662, (O'Callaghan's "History of New Netherland", vol. 2, p. 592; and B. F. Brink's "Olde Ulster", vol. 10, p. 205), which may have been the 40-50 acres for which the English Governor Nicolls gave him a deed of confirmation July 23, 1667. (L. P. vol. 1, p. 23; Calendar of Land Papers in the Office of the Secretary of the State of New York, p. 4; and Anjou's "Ulster County Probate--Records", vol. 1, p. 32). He also petitioned for certain lands at the Esopus, Mar. 31, 1663, which were granted him April 12. (See Docs. v. 13, pp. 241-242; Dutch MSS v. 10, p. 67; and Cal. v. 1, p. 246). In the latter record he described himself and his wife as old people and mentioned his wife as still being the village midwife.

A later petition, dated Nov. 17, 1663, for permission to acquire a lot near the mill gate at Wiltwyck, sufficiently large for a dwelling house, brewery and bakery, was granted December 8. (Docs. v. 13, p. 313; Dutch MSS, v. 10, p. 423; and Cal. v. 1, p. 256). This may have been the site upon which he erected the grist mill and brewery referred to by Sylvester in his "History of Ulster County, N. Y.", part 1, p. 44, and identified by him as having been located at the south side of the mill gate. Sylvester adds that good beer was made at that place for over 150 years, Esopus beer having as good a reputation in those days as Albany ale in later years.

As one of the four militia officers appointed by Evert Pels, the president of the village court, Slecht was a signer of a letter Jan. 15, 1663, to Director Stuyvesant, protesting the action

of the local court in pulling down a published ordinance regarding regulations for the protection of the village, particularly in view of the fact that their appointment had originated with the same court. (Docs. v. 13, pp. 235-237).

Further troubles had been encountered with the Indians, in 1663, when on June 7 the village of Wiltwyck and the new village of Hurley were attacked, resulting in the slaying of many of the inhabitants and the complete burning of the new village. Slecht, with his son (probably Hendrick), and a few others, succeeded in routing those savages who had gained entrance to the stockade. (O'Callaghan's "Documentary History of the State of New York", v. 4, pp. 39-41 in the 8vo. edition of 1851, and pp. 29-30 in the 4to. edition of the same year; Docs. v. 13, pp. 245-247, 256-257; and Sylvester's "History of Ulster County, N. Y.", part 2, pages 33-34).

As an aftermath to the troubles with the Indians, Slecht's wife appeared in court July 24, 1663, to answer a charge made by Johan de Decker, through the schout (sheriff), that she had called de Decker a "bloodsucker". Admitting the charge, Tryntje replied that she had spoken in hastiness, and from ill-will over their losses from the Indian attack. She was fined 25 guilders for the benefit of the church. (Dutch Records....p. 72; and Sylvester's "History of Ulster County, N. Y.", part 1, p. 54).

Having refused to render an account to the local court of the estate of Willem Jansen Seba, Slecht was arrested October 9, 1663, his confinement to continue until willing to abide by the orders of the court. Bail for his release was furnished the same day by two of the inhabitants, and on October 23, he requested 14 more days which were granted him. On Nov. 6, he was ordered to explain why he had rendered no account, to which he replied the Consistory had enjoined him against such action. (Dutch Records.. pp. 75-76; 80-81; 91; 100-101; and Anjou's "Ulster County Probate Records", vol. 1, pp. 21-22).

In view of the fact that his lease of Ebbing's farm was to expire in May, Slecht petitioned April 1, 1664, for permission to build on the lot of Aert Jacobsen Otterspoor, beyond the mill gate, as he had to have a dwelling house. (Dutch Records.....page 145). On the same day, Johanna de Laet, Ebbing's wife, instituted a suit against Slecht for 1721 guilders, 16 stivers ($488.72), in beavers, due for rent May 1, for the year 1663. Slecht claimed he had paid 35 schepels of wheat and the stiver money, whereupon the court ordered him to pay the balance. Also on the same day, Hester Douwesen sued him for 21-1/2 schepels of wheat. Having paid 5 schepels and one guilder in zeewan (wampum), he was ordered to pay the balance. (Dutch Records.... pp. 142-143). Johanna de Laet had been the widow of John de Hulter prior to her marriage to Ebbing, and Slecht's dealings with her date from as early as 1656, as evidenced by an entry earlier in this chapter. (Sylvester's History of Ulster County, part 1, p. 62).

On May 6, 1664, his lease having expired, Johanna de Laet asked that she be permitted to arrange with Slecht concerning what had been sown on the land. He requested an appraisal by impartial men, and she demanded 800 guilders ($320) for the balance of the rent for the year 1663. Slecht then presented an account against her for damages done and sustained during the year, because of the troubles caused by the Indians, in the sum of 2850 guilders ($1140), and maintained that he was not liable for payment of full rent. The court ordered, and it was mutually agreed by both parties, that Slecht should pay 500 guilders ($200), in beaver or corn at beaver value. Johanna also asked that Slecht give her an assignment for moneys owed him by the Company, to which he replied he could not, as he had already assigned 300 guilders to another party, but agreed to assign any balance, however. Johanna also asked that the judgment of April 1, be enforced by execution. This was dependent upon an appraisal of the grain sown, after which plaintiff was authorized to proceed for what would then appear to be due for the rent. (Dutch Records..... p. 151).

The property referred to represented one half of Ebbing's "bouwery", and in a lease executed Oct. 18, 1663, to Jan Willemsen Hooghteilinck, mention was made of Slecht's lease which was to expire May 1, 1664, at which time the new lessee was to take possession. (Fernow's "Minutes of the Orphanmaster's Court of New Amsterdam, 1655-1663", vol. 2, pp. 61-65; and Holland Society Yearbook for 1900, p. 157).

Slecht was convicted, "for taking up arms on Feb. 16, 1666, in a riotous and illegal manner, to awe, terrify and suppress his Majesty's....garrison, established at Esopus and deserves to be put to death", but the Governor sentenced him to be banished for three years and gave him the liberty to sell his estate at Esopus. (Anjou, vol. 1, p. 32). Whether he ever left the vicinity or not, is not known, but he appears to have been there the next year. He, with Albert Roosa and Louis DuBois, had been prominent in the mutiny at Esopus against the tyranny of Captain Brodhead, which later resulted in the suspension of the captain from his command. On Feb. 4/14, 1667, several complaints were made against Brodhead, among them being the charge that Slecht had been beaten in his own home by a soldier and after this forced by others to be imprisoned, and was used very hard by the same soldiers. He was also very ill-treated by the captain, in his own house, and his arms taken by force out of the house. Evert Pels was appointed one of the two men to acquaint the Captain with the answer of the villagers that Slecht be released, to prevent further trouble and danger. Brodhead's reply in effect, was a dare to the villagers to try to release Slecht, whom he said he would keep in prison as long as he thought good. (Docs. v. 13, pp. 406-415; and New York Genealogical and Biographical Record, vol. 28, p. 13).

Slecht may have considered moving to Flatbush about this time, as he purchased from Titus Syrachs, on April 12, 1669, a

house and lot located there. (Bergen's "Register of the Early Settlers of Kings County, N. Y.", p.265, quoting Liber C of Flatbush Records, p. 53). He appears to have lived there prior to his residence at the Esopus. (St. Nicholas Society of New York City, genealogical record for 1916, p. 90).

Slecht was one of the signers of a renewal of the articles of peace between the Indians and the inhabitants of Kingston, on Jan. 27, 1671. (Docs. v. 13, p. 401). He was a commissary of the "Hon. Court", at Kingston, in 1671. (Anjou, vol. 1, p. 189).

Sylvester, in his "History of Ulster County, N. Y.", part 1, p. 47, sets the year of Slecht's death as 1671, but an examination of further records indicates this is not correct, in fact that writer includes on page 193, a record dated 1692, at which time Slecht evidently was still living.

Slecht and his wife were the beneficiaries under a will made by Aerdt Aerdtsen Otterspoor, dated May 5, 1678, in which he bequeathed all his property, house, lot, Holland money, in Holland, to them. (Anjou, Vol. 1, p. 190).

No record has been seen which would set the date of Slecht's marriage, which undoubtedly took place in Holland. Gryntje Tysen Bos(ch), his first wife, died prior to Sept. 26, 1684, when he and Elsje Jans announced their intentions to marry. She was the widow of Hendric Jochemsz (Schoonmaker) of Bredstedt, Denmark. (Hoes, "Register of the Old Dutch Church at Kingston", p. 507). By the terms of a joint will dated August 17, (no year given, but probably 1676), Slecht and his first wife directed that the whole estate "shall be inherited by the survivor", and at their deaths, by their five children. In the event of the re-marriage of either one, then half of the property was to be divided immediately among these children. (Anjou, vol. 1, pp. 32-33).

Simultaneously with the announcement of their intentions to wed, Slecht and Elsje Jans agreed to a marriage contract which provided that the bridegroom was to donate to the bride as a dowry, 200 schepels (about 150 bushels) of wheat. In a separate will dated Oct. 8, 1684, Elsje directed that after her death, all her possessions were to go to her children, namely Jochem, Eghbert, Hendrick and Engeltje Hendrix, (her children by her marriage with Hendrick Jochemsz, two others,-a son and a daughter,- evidently having died young), and Pieter Adriaens, (by her marriage with Adriaen Petersen). An inventory of Slecht's estate, made at the same time, lists a house, brewery, orchard, hop garden, 3 morgens (6 acres) of land "across the Great Bridge", and household furniture. Money in Holland was to be inherited by his children, who, having inherited their deceased mother's share of the estate,-750 schepels of wheat (about 560 bushels), ruled that their father was to retain the amount, paying 5% interest per annum for which he was to mortgage his real property as listed above. The entire property to be inherited by four children, except the 200 schepels of wheat which had been given his second wife as her dowry.

(Anjou, vol. 1, p. 191). Reference to only four children in the latter record made in 1684, suggests that one of the five (daughter), who was living when Slecht and his first wife made the will of 1676, probably died prior to 1684.

The marriage contract of 1684 clearly indicates that Elsje had been married twice before her marriage to Slecht. Taken in conjunction with the Kingston Church record , which names her as the widow of Hendric Jochemsz , the name of her first husband is clearly established as having been Adriaen (from which was derived the name of her son Peter Adriaens). These facts do not agree with Anjou's version in his "Ulster County Probate Records", vol. 1, p. 32 , where it is stated that she was the widow of Adriaen Petersen van Alemaer at the time of her marriage with Slecht ,and that after Slecht's death she married as her third husband, Hendric Jochemsz. That Anjou's version is incorrect appears to be substantiated by records appearing in Brink's "Olde Ulster", vol. 8, p. 112; vol. 2, pp. 32-35; and New York Genealogical and Biographical Record, vol. 19, pp. 22-23. Elsje named as daughter of Jan Jansen Broestede.

The first grant of land in the neighborhood lying two miles south of Kingston, made by the trustees of that village, was given to Slecht and Cornelis Hoogeboom. Dated January 2, 1689, the grant was for 201-1/2 acres called a "fly", (a corruption of the word "vly", meaning valley or low meadow). (Sylvester's "History of Ulster County", Part 1, p. 193). Probably the land described by a survey made May 4, 1686. (L. P. vol. 2, p. 177; and Calendar of Land Papers", p. 41). Slecht sold his half of the "great fly", to Severyn Tymhout, Oct. 6, 1692. (Sylvester, part 1, page 193).

From the joint will made by Slecht and his first wife (Anjou vol. 1, pp. 32-33), it is definitely established that there were five children living at the time of the making of the will, three daughters and two sons. Documentary evidence already referred to clearly establishes that there was one other son , who was killed by Indians, and from Sylvester's "History of Ulster County", part 1, p. 58, is obtained information that there was another daughter, who was captured by the Indians in 1663. I have not seen any documentary evidence to support this latter statement , however .

One of the daughters was:-

2. JACOMYNTJE SLECHT. She was married three times. First on March 14, 1663 , at Kingston , to Jan Barentsen Kunst , her name appearing as Jacomyntje Cornelis. She married second, after Oct. 27, 1668, Gerrit Focken of Hitsen, East Friesland. She married as her third husband, Jan Elting , son of Roelif and Aeltje Elting . By her first marriage she had two children,-Jannetje, baptized on Feb. 24, 1664, and Barent baptized Jan. 30, 1667. By her second marriage she had three children, Hillotje who married Gerrit, son of Cornelius Wynkoop and Maria Janse Langedyk ; Jacomyntje , who married Henry Pawling ; and Eryntje who married Solomon DuBois . The last two named, are incorrectly listed by Anjou, vol. 1, page

33, as children by her third marriage (with Jan Elting). The date of her third marriage is not a matter of record , but it probably occurred about 1677. By that marriage she had five children, two daughters and three sons. Aeltje Elting, probably the eldest of the five, and born about 1678, married Aert Gerritsen (Van Wagenen, #32 in the Van Wagenen Geneelogy) Oct. 6, 1695. (Hoes p.511). Information relative to the ancestry of Jan Elting and his descendants is included in the Elting chapter.

Jacomyntje was received into the church at Kingston, Dec. 15 1662. (Sylvester's "History of Ulster County", part 1, p. 63).

CHAPTER IV

VAN DEN BERGH LINE

No complete genealogy of the Van den Bergh family has been seen by this writer. Jonathan Pearson, in his "Genealogies of the First Settlers of Albany, N. Y.", 1872, pages 118-120, appears to have been the first to publish records of several family lines. They are not arranged, however, in a conventional form, genealogically. Talcott, in his "Genealogical Notes of New York and New England Families", 1883, pp. 305-306, has compiled a few records, but they duplicate, in general , a portion of the records compiled by Pearson. Portions of Pearson's work are duplicated in "Hudson, Mohawk Genealogical Memoirs", vol. 3, pp. 1110-1111; 1306 to 1307 , to which have been added records of later generations in specific lines. Information of the family included on p. 1707, and p. xxxvi of vol. 4 , is derived from Pearson's work and also from the Van Rensselaer-Bowier Manuscripts.

It is believed that there were three brothers Van den Bergh, who settled in Beverwyck (Albany),-namely Claes Cornelissen,Gerrit Cornelissen, and Gysbert Cornelissen, all of whom left sons . (Early Records of the City and County of Albany and the Colony of Rensselaerswyck, vol. 1, 1656-1675, p. 76, footnote #2). Claes is referred to in the Van Rensselaer-Bowier MSS, pp. 734, 842, and in "Court Minutes of Ft. Orange and Beverwyck, vol. 1, p. 177, as the servant and brother of Gysbert Cornelissen , or Gysbert aende berch. Pages 45 and 48 of vol. 3 of "Early Records of Albany", show clearly that Claes was also known by the name Van den Berch. These facts definitely establish that at least two of the above mentioned individuals were brothers and that they were residents of Albany. The writer has seen no evidence that Gerrit Cornelissen was ever identified with Albany. The fact that Gysbert Cornelissen was also known as "Van Deuckelen", lends support to the assumption that he was from that place in Holland , province of Utrecht, and that his brothers were also from there.

From the known facts that Claes and Gysbert were referred to as "Cornelissen", it can be said that the first of the family, of whom we have knowledge, was named:-

1. CORNELIS....., who had sons:-

2. Claes Cornelissen.

3. Gysbert Cornelissen.

It is further believed that there was another son:-

4. GERRIT CORNELISSEN.

The writer has seen no record which would definitely prove that Gerrit Cornelissen (# 4) , actually settled in New Netherland. None of his children are listed by Pearson , except Huybert

Gerritsen who is not included, however, as a Van den Bergh. There were evidently at least four children, as follows:-

5. Arriantje Gerritsen, who married Sept. 22, 1689, Cornelis Martensen. She married second, June 23, 1693, Coenraed Elmendorf, of Kingston, N. Y. Arriantje is identified as having been a van den Bergh. (New York Genealogical and Biographical Record, volume 28, p. 208, containing Van Buren records).

6. Barent Gerritsen, married Mar. 16, 1687, Geertruy Janse Witbeck. Records of his children are included on page 118 of the Pearson volume.

7. Cornelis Gerritsen. He was a witness at the baptism of Gerrit, son of his brother Barent, Oct. 13, 1691. (HSYB for 1904 p. 54). He was also a witness at the baptism of Lysbet, first child of his brother, Huybert Gerritsen, July 29, 1694. (HSYB, p. 65).

8. HUYBERT GERRITSEN. He was a witness at the baptism of Jan the first child of his brother Barent Gerritsen, October 6, 1689. (HSYB for 1904, p. 48).

Albany church records, prior to 1683, having been lost, the date of baptism of Huybert Gerritsen is not known. His name is included in a list of members of the Church of Jesus Christ at New Albany in that year. (HSYB for 1904, p. 7). A footnote on page 131 of vol. 8 of the New York Genealogical and Biographical Record, suggests that Huybert may have been a brother of Barent Gerritsen van den Bergh, a belief which is also held by the writer, in view of the foregoing baptismal records which indicate a close family relationship between Barent, Cornelis and Huybert. A further suggestion, in the same footnote, that Huybert may have been the son of Gerrit van den Bergh of Albany, 1663, cannot be accepted as fact. This Gerrit was the Gerrit Gysbertsen of whom mention is made in "Early Records of Albany", vol. 3, pp. 262-263, under date of Dec. 27, 1663 and who was probably the son of Gysbert Cornelissen (#3). In that case, he would have been a cousin of Huybert, who is believed to have been a son of Gerrit Cornelissen.

Huybert Gerritsen is referred to on p. 53 of Pearson's work, but no connection with the Van den Bergh family is indicated. He married, Dec. 20, 1693, at Albany, Maria Lansing, daughter of Hendrick Lansing and Elizabeth Caspers. (HSYB for 1904, p. 26). The record shows that neither of them had been married before and that they were both living in New Albany.

Huybert was living in August, 1723, when he was present at the funeral of Mrs. Geertruyd Van Cortlandt in New York City. (New York Genealogical and Biographical Record, vol. 49, p. 373). Maria was living June 29, 1729, when she was a witness at the baptism of Isaac, son of her daughter, Maria van den Bergh and Abraham

Kip. (Collections of the New York Genealogical and Biographical Society, vol. 2, p. 492).

Huybert and Maria had 11 children, " daughters, 4 sons. The first child , a daughter, was baptized in Albany, July 29, 1694 . (HSYB for 1904, p. 65). Cornelis Gerritsen,-probably a brother of Huybert,- and Lysbeth Lansing (Maria's mother) , were witnesses. The family later removed to New York City , but were in Albany as late as June 23, 16[illegible], when Maria was a witness at the baptism of Lysbet, daughter of Isaac Caspers (probably her uncle). (HSYB for 1904, p. 68). They joined the Reformed Dutch Church in New York City, Dec. 2, 1696-" Huybert Gerritsen en syn huysv[illegible], Maria Lansing..... met attestatien van N. Albanien".(New York Genealogical and Biographical Record, vol. 59, p. 160).

Copies of the baptismal records of the ten children born in New York City in the period from 1695 to 1714 , are included in the "Collections of the New York Genealogical and Biographical Society", vol. 2. A complete record appears on page 131 of vol. 8 of the Society's "Record". The second child, and the first one born in New York City was:-

10. THEUNTJE VAN DEN BERGH, born Nov. 15, 1695,baptized Nov. 17, 1695. (Collections of the New York Genealogical and Biographical Society, vol. 2, p. 291). The surname Van den Bergh does not appear in the baptismal records until 1699 , all records prior to that time showing Gerritsen as the surname. The writer is of the opinion that Van den Bergh was finally adopted as the family name solely for the reason that Huybert's uncle, Gysbert Cornelissen was known by, and used, that name. Huybert's adoption of it seems to substantiate the theory that has been advanced in regard to his position in the Van den Bergh records.

The name Van den Bergh appears to have had its origin in the fact that Gysbert Cornelissen (often referred to as Van Brenckelen) lived on a farm called "de Hoogenberch", and was sometimes referred to as Gysbert Cornelissen van den Hoogenberch, or op den berch, or aende berch. (Van Rensselaer-Bowier MSS, p. 837). The name finally became Van den Bergh.

A daughter, Maria van den Bergh , married Abraham Kip , and had ten children. Records of them are included on pp. 131-132 of the New York Genealogical and Biographical Record, vol. 8; and on page 341 of "History of the Kip Family in America", by Frederick E. Kip. Maria's will, dated July 19, 1765, and proved Jan. 5, 1785, describes her father, Huybert Van den Bergh, as a "cartman". (Collections of the New York Historical Society, vol. 13 of Abstracts of Wills, p. 73-74).

Theuntje married, Aug. 8, 1718, in New York City, Gerrit Van Wagenen (#42 in the Van Wagenen Genealogy). (Collections of the

New York Genealogical and Biographical Society, vol. 1, p. 129). They lived in Kingston until 1733, when they removed to New York City where Gerrit assumed his duties as headmaster of the School of the Collegiate Reformed Dutch Church there, a position which he held until his death in 1743. They joined the church in New York, Aug. 21, 1733,-"Gerrit Van Wagenen en syn huis v. Theuntje van den Bergh.....met attestation van Kingstown". (New York Genealogical and Biographical Record, vol. 60, p. 281).

Theuntje was a witness, Jan. 8, 1749, at the baptism of her grandson, Gerrit Van Wagenen (#55 in the Van Wagenen Genealogy), the son of her son Gerrit (#44). (Readington Church baptisms in the Somerset County, N. J. Historical Quarterlies, v. 4, p. 305). She was also a witness, Jan. 24, 1753, at the baptism of another grandson, also named Gerrit (#70), the son of her son Huybert Van Wagenen (#46). (Collections of the New York Genealogical and Biographical Society, vol. 3, p. 182).

Records of her descendants, and of the ancestry of Gerrit Van Wagenen, are included in the Van Wagenen Genealogy of 1884, and other details are included in the 1942 record and in the Van Wagnen appendix to the current work.

CHAPTER V

LANSING LINE

Studies of this family, made over a period of several years by various compilers, and culminating in the publication of valuable Holland records in 1941, makes possible the preparation of this chapter. With the exception of the inclusion of more specific information relative to exact sources of certain records, the work as here presented represents, in general, a condensed review and digest of the results of searches conducted by other individuals.

Perhaps the first effort to compile a comprehensive record of the family, was made by Jonathan Pearson, in his "Genealogies of the First Settlers of Albany, N. Y.", 1872, pages 70-72. The records had appeared initially in Munsell's "Collections on the History of Albany", in 1871. Pearson was also the contributor during the year 1872, of an article appearing in volume 3 of the New York Genealogical and Biographical Record, pages 84-85, which was similar in content to a portion of his book.

The second major effort to catalogue the family, was made by S. V. Talcott,-the compilation having been included as a part of his "Genealogical Notes of New York and New England Families". pp. 113-167; 438-440; 451-454. Published in 1883, the records were arranged in a conventional genealogical form, in contrast to Pearson's work, in which family lines are not readily apparent.

Involving a deeper study of the family, and representing the first effort to obtain definite information in regard to its beginnings in Holland, a third account appeared in the Albany "Argus", of Sunday, December 14, 1902, written by John V. L. Pruyn, himself a descendant. His searches for, and study of, Holland records, appear to have been extensive. No connecting links were found, however, between the family in America and the numerous individuals of the name in Holland.

In 1916 Claude G. Munsell published his "The Lansing Family, or Descendants of Gerrit Frederickse Lansing", and in 1925, the Dutch Settlers Society of Albany, New York, in its first yearbook gave the date of settlement of the family as 1640, the same date having been given by Munsell. The Society's yearbook, volume 5, changed the date to 1663, and later,-in vol. 6,-to 1655, as having been the date of arrival, not of Gerrit at all, but of his widow,-who had remarried,- and five of her six children. The numbers assigned to those individuals whose names are included in the pages which follow, are the same as used by Mr. Munsell in his compilation.

Vol. 26 (1932) of the American Historical Society's "Americana", pp. 288-292, includes some of the more important parts of the "Argus" article, as well as data obtained from the works of Pearson, Talcott, and Munsell, supplemented with transcriptions of a few Albany records.

Writing in the New York Genealogical and Biographical Record vol. 65, (1934), pp. 56-58, Mr. William J. Hoffman summarizes the 'Argus' article, and Mr. Van Laer's account in the Dutch Settlers Society yearbook, vol. 6, pp. 7-8.

Later, in vol. 72 (1941) of the New York Gen. and Biog. Rec. pp. 26-28, Mr. Hoffman includes further data of the family in regard to its Holland origin. He discloses records which appear to establish that the Lansing ancestor was not Gerrit Frederickse at all, but Gerrit Gerritse Lansing. The State Archivist of the Province of Overijssell, in which is located the city of Hasselt- from whence came the Lansings,- had brought to the attention of Mr. Hoffman the fact that two baptismal records had been found, as follows:-

Aeltien Lansing (#5), baptised Oct. 29, 1637, and Hillegien Lansing, baptized Oct. 3, 1650. Parents, Gerrit Gerritse, (baker) and Lysbeth Hendricks. No records were available for the period, 1637 to 1648. The names of the two children check exactly with the names of two of the six children of the Lysbeth Hendricks who is known to have been the maternal ancestor of the Lansings in America, and in further support of his theory relative to the correct name of Gerrit, Mr. Hoffman adds that it was frequently the custom for a widow to marry as her next husband, one who was engaged in the same trade as her former husband. In this case, it is known that the second husband of Lysbeth Hendricks Lansing was also a baker. Mr. Hoffman adds that had the name of the first husband been Gerrit Frederickse, it is unusual to find that none of his children bore the name Frederick, following a Dutch custom. There was, however, a son named Gerrit, which would also lend added support to the theory that the name of the Lansing ancestor was Gerrit Gerritsen. It is of interest to note that the will of Lysbeth Hendricks, names her daughter, Hillegien as the youngest daughter.

Confronted with the foregoing facts, and seeking further information which would prove his theory that Gerrit Gerritsen was the correct name of the ancestor of the family in America, Mr. Hoffman had a review made of a power of attorney (details of this document are given later), in which the name appears as Gerrit Frederickse, the record having been the basis for the use of that name as the correct one. It was found that the name Frederickse had not been included in the body of the original text, but had been added in the margin of the document apparently as an afterthought. The theory is that there may have been a misunderstanding among the children as to the correct name of their father.

The findings of Mr. Hoffman disprove a statement made by Mr. Fruyn that there were no records of the family in Hasselt, two attempts on his part, while in Holland, having failed to locate a single document relative to the specific lineage. Having found that many Lansings had lived in the Province of Gelderland, Mr. Fruyn was of the opinion that it may have been the original home of Gerrit Lansing prior to his residence in Overijssell.

Mr. Pruyn's research shows that there is an unofficial memorandum, relating to the family, on file at the High Council of Nobles at The Hague, dating back to the 14th. century, specifically to a date as early as 1336. It is obviously impossible to trace the family connections that far back (for example the records of baptisms at Hasselt go back only as far as 1591). It is of interest to note, however, that the records show a judge at Doesburg in 1382, named Gerrit Lansing.

If, as has been stated, the ancestor of the family in America was Gerrit Gerritse Lansing, then his father was the first of whom we would have any knowledge, and his name would have been:-

GERRIT (.....) LANSING. His son was:-

1. GERRIT GERRITSEN LANSING. Although he may have been originally a resident in the Province of Gelderland (according to Mr. Pruyn), yet he is also found to have been a resident of Hasselt, in the Province of Overijssell, Holland. This city, located in the eastern section of Holland, and five and one half miles north of Zwolle (or Swoll), the capital of the province, was a fortress city in those days. Gerrit's residence in Hasselt dates at least from 1648, a record found by Mr. Pruyn, in a book " Dagelijksche Handelingen Contentieuse en Volontaire zaken. Resolutien, 1648-1659", folio 5, dated Jan. 13, 1643, mentioning Gerrit in a claim involving the sum of 10 guilders, 11 stivers, 12 pennies.

Gerrit's wife was ELIZABETH HENDRICKS, probably the daughter of HENDRICK TEN CATE, of the village of Borne, near Almelo, province of Overijssell. This Hendrick had a son Barent Hendricksen, who in turn had a son, Jan Barentz. In the power of attorney previously referred to, and a description of which appears later in this chapter, Jan is referred to as the cousin of the children of Elizabeth Hendricks. From this record is derived the statement relative to the identity of Elizabeth's father. The members of the ten Cate family were at first Baptists, and it is not improbable that the Lansings may have been members of that church as well. The ten Cates lived in Vriesenvenne as well as Borne, and the fact that Gerrit Lansing also had interests in the former city, is in Mr. Hoffman's opinion, valuable supporting evidence that Gerrit's wife was a ten Cate. Additional information of other lines of the ten Cate family appears in a footnote on page 57 of vol. 65 of the New York Genealogical and Biographical Record.

Gerrit Lansing was a baker by trade, and his death occurred before 1654. This is established from a record of the Schepen (Municipal) Court of Hasselt,-"Register van Momberstellingen en Erfrustingen",-(Register of Appointment of Guardianship and division of Estates). Dated Jan. 31, 1654, being an agreement made by Lysbeth Hendricks "widow of the late Gerrit Lansinck", with Wouter Alberts, in which is allocated to her children by her first husband, property or money at Vriesenvenne or elsewhere, which had been promised her and her first husband, but which they had never received. The income from the estate to revert to her and her

second husband until the children were no longer in need of support by their parents. The mother and her "bridegroom"(they were therefore not married, as the custom in Holland was to so designate the future husband until the marriage, and not afterward and in like manner the same custom applied to the "bride"), promised to bring the children up as God-fearing, honest children, to teach them good manners, reading and writing , and to shelter , clothe, and feed them until able to support themselves , and to teach the boys a trade. From the fact that Wouter was referred to as the "bridegroom", it is evident that their "Banns" (or intentions to marry) had been published. This period lasted for two weeks before the marriage, so it is presumed that they were married some time in February. The 1654 date was probably old style, our present system of reckoning would refer to the year as 1655.

The date of arrival of the family in Albany has long been a matter of conflicting opinions. For some time it was accepted as fact that Gerrit Lansing had lived in America , Pearson having stated that he died before Oct. 3, 1679; Talcott asserting that he came over in 1650; Munsell setting the date at 1640; and Mr. Van Laer, the celebrated archivist of the State of New York saying that the inscription on a bell of the Albany carillon , given in memory of "Gerrit Frederickse Lansing, the Settler", bears the date 1646.

The uncertainty of the correct date is reflected in the use of the year 1663 by the Dutch Settlers Society of Albany yearbook volume 5 , as the date of arrival, and 1655 in volume 6. The use of 1663 as the date, was derived from the fact that Mr. Van Laer had found no mention of Gerrit in the Albany records , prior to that year. The first mention of a Gerrit Lansing is included in "Early Records of Albany" vol. 3, Notarial Papers, p. 243. Dated Mar. 13, 1663, the record is a lease signed by Gerrit for a house in Beverwyck (Albany), "wherein Wouter Albertsen van der Uythoff now dwells". It has already been shown that the ancestor of the family in America, died before his family came over and the record just quoted concerned his son, Gerrit, then the step-son of van der Uythoff. Church records of Albany, prior to 1683 are no longer in existence - in themselves, they would have provided extremely valuable information of the family.

The correct year of the arrival of the family in America is derived from the following letter, dated Sept. 25, 1655 , at Amsterdam, Holland, addressed to the Director and Council of New Netherland, and reading as follows:-

"The invoices of private goods shipped by this ship , the 'Gelderse Blom' are enclosed. The free people or passengers coming over in the same ship are Jevert Fiemersen and Aysbet Hendricks, wife of Wouter Albertsen Becker (baker) , with her five children, of whom three are boys. This for your information. By order of the Lords Directors". Signed by A. B. De Decker, Jr.(See Docs. v. 14, p. 334).

One other daughter apparently came over , either before her mother (possibly with her step-father), or perhaps may have been married and came on some other vessel with her husband.

The joint will of Lysbeth Hendricks and her second husband, Wouter Albertsen van der Uythoff , dated June 4, 1678 , describes her as "sickly", and it is presumed that she died soon after , as on October 3, 1679, a power of attorney given at Albany , by her three sons, her daughter Elletie,-then the widow of Storm van der Zee,-and the husbands of her two other daughters , to their cousin Jan Barentsz ten Cate (dwelling in Sroll , province of Overijssell) and a second party (residing at Hasselt) , to collect their inheritance , left them by their father , deceased , named Gerrit (Frederickse, written in the margin of the document) Lansing, in his lifetime, burgher of Hasselt. (Early Records of Albany, vol. 3, pp. 450-451; and vol. 2, pp. 64-65). The power of attorney is recorded on page 51 of Book 3, of the original record of deeds. No mention is made of the mother, and it is presumed she had died prior to the date on which the power of attorney was made. The date 1679 is incorrectly given as 1697 in Munsell's genealogy of the family, at page 1.

Lysbet's second husband married, Oct. 14, 1691, Elizabeth De Lint, widow of Jacob Meese Vrooman. (New York Genealogical and Biographical Record, vol. 32, p. 38). His will, made June 4, 1678 mentions his wife, Lysbet, and her six children by her first marriage to Gerrit Lansing. (Calendar of Wills on File at Albany, by Berthold Fernow, p. 444). He died between Jan. 4, 1699 when he took the oath of allegiance, and July 25 , 1699, when his widow took charge of the estate of Jan Verbeeck. (Munsell's "Annals of Albany", vol. 3, pp. 53, 275; vol. 4, p. 133). They were married in Albany. (Holland Society Yearbook for 1904).

The will of Lysbeth Hendricks, and the power of attorney referred to previously, both establish the names of the children of Lysbeth and her first husband, Gerrit Lansing. Of the three sons and three daughters, one of the sons was :-

3. HENDRICK LANSING, born in Holland, and came to Albany in 1655 with his mother, then the wife of Wouter Albertsen van der Uythoff.

Hendrick is named in two court records, dated March 18 , and April 1, 1669, citing him for first and second defaults. (Court Minutes of Albany, Colony of Rensselaerswyck and Schenectady, v. 1, pp. 59, 61). He was one of 12 signers of an affidavit dated Aug. 24, 1676, and is mentioned in a record bearing the date Feb. 6, 1677. His name appears with others, in a list of persons who were to keep the stockade in repair , his assignment having been for 2 rods of posts,-this record dated Mar. 5, 1679. On Sept. 26, 1679, he was one of 12 jurors called for a jury trial. (Court Minutes, vol. 2, pp. 148, 193, 397, 443).

He was a signer, Feb. 2, 1670, with three others, of a contract of sale in which they agreed to purchase a parcel of land from Geertruy Peters; to be paid for with 13 merchantable beaver skins. (Early Records of Albany, vol. 3, pp. 367-368).

A lot in Albany was conveyed to him and Lucas Gerritse, on Sept. 9, 1672, by Jan Cluto. (Early Records of Albany, vol. 1, p. 506). It was in their possession until 1679, Cluto giving them a new deed dated April 15, 1679, presumably for their use in giving a clear title to a new purchaser. (Early Records of Albany, vol. 2, pp. 41-42). The property was located on the corner of North Pearl and Maiden Lane. (Munsell's "Collections on the History of Albany", vol. 4, p. 215).

He is listed as an Indian interpreter in 1674 (O'Callaghan's "Register of New Netherland", p. 134); and is mentioned in Albany records in 1675, 1677, 1680 and 1682. (Early Records of Albany, vol. 3, pp. 432, 444, 496, 540).

He purchased land from Theunisz van Velsen, March 29, 1686, for the sum of 110 beaver skins or the value in silver money. It was located on the east side of the Hudson River, in an area now a part of the city of Troy, and he appears to have been living there at the time of the purchase. (Dutch Settlers Society of Albany, vol. 13, pp. 8-9).

Hendrick was sworn in as a trial witness, Sept. 4, 1694, and on Oct. 6, 1695, he appeared as attorney for Ray Croesveelt. (See Munsell's "Annals of Albany", vol. 2, p. 132; and vol. 3, p. 16).

In the Albany census of June 16, 1697, his family consisted of himself, his wife and two children. (Howell and Tenney "History of Albany County", pp. 272, 274).

He was sued June 25, 1700, for two years' house rent which he denied owing. (Munsell's "Annals of Albany", vol. 4, p. 114).

He died July 11, 1709, according to church records. (Early Records of Albany, vol. 1, p. 506).

Hendrick's wife was ELIZABETH CASPERS but no record of their marriage has been seen. They were members of the Church of Jesus Christ at New Albany in 1683, the year in which existing church records commence. (Holland Society Yearbook for 1904, p. 2). They were witnesses, Oct. 19, 1684, at the baptism of Jacob, son of Isaac Caspers, probably the brother of Lysbet. (HSYB for 1904, p. 35). Hendrick was a witness, April 24, 1687, at the baptism of Maritje, daughter of Isaac Caspers, and July 29, 1694, at the baptism of Johannes, son of Jan Caspers, brother of Isaac, and probably brother of Lysbet. (HSYB for 1904, pp. 42, 65). The ancestry of Lysbet is included in the records of the Halenbeck family in the next chapter.

Hendrick and his wife Lysbet, were the parents of two sons and three daughters. The order of their births is not known. One of the daughters was:-

21. MARIA LANSING. She married, December 20, 1693 at Albany, HUYBERT GERRITSEN(VAN DEN BERGH). (NSTD for 1904, p. 26). Date given by Talcott as Oct. 20, is an error. They were witnesses at the baptism, Jan. 17, 1694, of Johanna, daughter of Jacob Caspers while Maria was a witness June 23, 1695 at the baptism of Lysbet, daughter of Isaac Caspers. (NSTD for 1904, pp. 63, 62). Maria was probably the niece of Jacob and Isaac Caspers, her mother, Lysbet Caspers evidently having been the sister of those brothers.

The date of Maria's death is not known, but she was living, June 29, 1729 when she was a witness at the baptism of Isaac, son of her daughter, Maria van den Berg and Abraham Hip. (Collections of the New York Genealogical and Biographical Society, vol. 2, p. 492).

CHAPTER VI

HALENBECK LINE

The early generations of this family were not known by the name Halenbeck (or similar derivations there-of) , and it is presumed that the ultimate adoption of the name was derived from the probable residence of the ancestor of the family in Hollenbeck, a locality in Holstein then located some 20 miles south of Kiel, in Germany. It is also believed that the members of the family were Lutherans. (Early Records of Albany, vol. 2, pp. 11, 186).

The ancestor of the family in America was:-
CASPER JACOBSEN, whose father evidently bore the name JACOB. Casper is recorded in the yearbooks of the Dutch Settlers Society of Albany, N. Y., as having settled there in 1650.

The first official record of him is in the form of a lease , dated Mar. 2, 1651 , for a house and lot in Beverwyck (Albany) , the term of said lease to start at "Amsterdam Fair", (Sept. 22) , of the same year. (Court Minutes of Rensselaerswyck, 1648-1652, p. 155). He was probably a day laborer.

On Nov. 28, 1651, he took the required oath of allegiance to the patroon of the colony of Rensselaerswyck , along with Evert Pels and Aert Jacobsen (Van Wagenen) , of whom information is included in this volume. (O'Callaghan's "History of New Netherland", vol. 2, p. 176).

His petition for a certain lot in Beverwyck was granted him on April 30, 1652. (Court Minutes of Fort Orange and Beverwyck, 1652-1656, vol. 1 , p. 18). This was probably the lot located between Broadway and the Hudson River, south of Third Street, which was in his possession until 1657. It measured 4 rods, 4 feet, by 16 rods, 7 feet, (rainelend measure). (Munsell's "Collections on the History of Albany", vol. 4, p. 191). He sold the lot, together with the house and garden, Jan. 22 , 1657 , for the sum of 810 guilders ($324), delivery to be made May 8 , and payment to be made in merchantable beaver skins. On June 5 he declared that he had granted and conveyed the property to its new owner. (Early Records of Albany, vol. 1, pp. 16-17; 31-32).

He acquired patents to two other lots in Albany, one bearing the date Oct. 25, 1653 , and the other, Dec. 29, 1663 , according to records in the Book of Patents and Town Records. (Howell and Tenney, "History of the County of Albany, N. Y.", 1609-1886, page 295; and O'Callaghan's "History of New Netherland", vol. 2, page 587). The latter lot, which he intended to use for a garden, (see Early Records of Albany, vol. 1, pp. 341-342), may have been the one for which a deed of confirmation was granted him by Governor Nicolls, April 25, 1667. (L. P. vol. 1, p. 19; and Calendar of Land Papers, 1643-1664, in the Office of the Secretary of State of the State of New York, p. 4).

He instituted a suit against Claes Hendricks, Sept. 10, 1658 and on the same date was sued by Harmen Vedder. (Minutes of the Court of Fort Orange and Beverwyck, vol. 2 (1657-1660), p. 157).

On April 6, 1677, he requested permission from the court to move his fence around his land further up the hill in order to have more room, as he intended to build a new log fence. He is mentioned also in a record dated May 7, 1678. (Minutes of the Court of Albany, Colony of Rensselaerswyck and Schenectady, vol. 1, (1675-1680), pp. 223, 316).

The date of his death is not known, but his will, devising two lots in Albany, was proved in August, 1703. He is supposed to have also lived in Coxsackie. (Munsell's "Collections on the History of Albany", vol. 2, pp. 415-416).

Sources reviewed by the writer, in which information of Casper's family is included, generally list only two sons, namely, Isaac Caspers and Jan Caspers. That there was also a third son, Jacob Caspers, can be inferred from a study of the church records as well as other records. Mrs. Bessie M. Shaffer, of Albany, who has made a special study of the family, informs me that the Henry Cady records, one copy of which is included in the files of the New York Genealogical and Biographical Society, show the following data:-

Isaac Caspers, born Nov. 7, 1650.
Jan Caspers, born July 6, 1652.
Jacob Caspers, born Oct. 9, 1660.

It is known that Jan was the half-brother of Catrina Hofmeyer (Collections of the Dutchess County Historical Society, vol. 1 pp. 26, 71), and it thus appears that Mrs. Hofmeyer married Casper Jacobsen as her second husband. She was therefore the mother of at least two of his children, and it is not improbableshe may have also been the mother of Isaac Caspers, eldest of the three sons of Casper Jacobsen.

Isaac lived in Albany, but his brother, Jan, purchased land at Coxsackie and Athens, and evidently lived in one or both of those places. (Munsell's "Collections on the History of Albany", vol. 2, pp. 415-416). The other brother, Jacob, also owned land in the two villages. (Vedder's "History of Greene County, N. Y., 1651-1800", p. 66; and Galt's "Dear Old Greene County", p. 190).

In the census of the Colony of Rensselaerswyck, under date of June 16, 1697, Isaac's family lists three children, Jan's included four children, and Jacob's included five. (Howell and Tenney, "History of the County of Albany, New York, 1609-1886," pages 272-274).

Additional information of the Helenbeck families is included in Pearson's "Genealogies of the First Settlers of Albany", pp. 58 to 59; Munsell's "Collections on the History of Albany", volume 2

pp. 410-416; Hufson Moh [illegible] Genealogical Memoirs, volume 3, pages 1342-1343, vol. 4, p. xxii; and New York Gen. and Biog. Society's "Record", vol. 30, p. 125).

An examination of the Albany Church records (Holland Society Yearbook for 1904), reveals that there was an ELIZABETH CASPERS, in Albany, and that she was a contemporary of Isaac Caspers, at the baptism of whose son, Jacob, she was a witness Oct. 19, 1684, and again, on Mar. 13, 1691, at the baptism of Isaac's son, Hendrick, her name in the latter case being given as Lysbet Lansing. Her husband was also a witness, and on April 24, 1687, he was a witness at the baptism of Isaac's daughter, Maritje, and still later, on July 19, 1694, he witnessed the baptism of Jan's son, Johannes. (HSYB for 1904, pp. 35, 56, 42, 65). The apparently close association of persons bearing the name Caspers, as shown by the church records, appears to justify the writer's opinion that Elizabeth was a member of the Halenbeck line.

She married, on a date unknown, HENDRICK LANSING, and the records of his ancestry and of their descendants, are included in the Lansing chapter. It is not improbable that Lysbet may have been a daughter of Mrs. Hofmeyer, by her marriage with Casper Jacobsen.

CHAPTER VII

TEN EYCK LINE

S. V. Talcott, in his 'Genealogical Notes of New York and New England Families', (1886), pp. 228-252, was probably the first to prepare a comprehensive record of the Ten Dyck family. It remained, however, for Mr. Henry Waterman George, - writing in the New York Genealogical and Biographical Record, volume 63, (1932), pp. 152-165; 269-285; 321-334; vol. 64, pp. 87-88; vol. 65, pp. 190-191; and vol. 66, p. 88, - to prepare an exceedingly accurate, and more detailed account of the family. Mr. George's work is enhanced by his quoting of the documentary sources from which many of his records were obtained. He does not, however, refer to specific page numbers of the volumes from which his data was obtained.

An independent search was made by the writer, for the purpose of determining if additional sources might reveal still other information of the family. Included in the works reviewed were some twenty-five or thirty volumes, containing varying amounts of data, but none of which was not covered in Mr. George's work. The several documentary sources upon which much of his work was based were also reviewed by the writer, for the purpose of obtaining the specific volume and page numbers in which were included those records bearing directly upon the current work.

Re-arranged to suit the purpose of this chapter, and augmented by other records and specific data concerning the source material, Mr. George's work has been the basis for the account which follows. The numbers used to identify the various individuals correspond with the system used by Mr. George, and therefore are not the numbers used by Talcott in his references to the same persons.

1. COENRAET TEN EYCK appears to have been the first of the family in America, and is believed to have emigrated to New Amsterdam (New York City), about 1650 or 1651. At least one other of the family, Andries Ten Dyck, - who was a witness at the baptism of one of Coenraet's children, - may have been a brother. The name which was originally "te den Eyck", signifies "at the Oak", and may indicate the location of the place of residence in a locality, so identified, near the city of Amsterdam.

He was granted a patent for a lot in New Amsterdam, Jan. 4, 1651, and this record is the first one of him after his arrival there. (O'Callaghan's 'History of New Netherland', vol. 2, page 586). Approximately 25 by 95 feet, the lot was located on the west side of the "heere Graft", - also known as the Common Ditch, - and now called Broad Street. It was the second lot south of Heerenstreet, which was located between the Common Highway, now Stone Street, and the Old Ditch Road, now Beaver Street. (See Valentine's "History of New York", pp. 111-112, and Van Pelt's "Leslie's History of the Greater New York", vol. 1, map between

pages 26-27). By occupation a tanner, and a manufacturer of, and dealer in, shoes, Coenraet is said to have occupied these premises as his place of residence. His tan pits were first located on the same side of the street, and above Beaver Street, where he owned a number of lots, the ground being marshy and suitable for tanning purposes. (See Valentine's volume). At that time, the city limits on the north appear to have been on the line of the present Wall Street, and an ordinance was eventually passed, excluding tan pits from the city. Coenraet and three other tanners and shoemakers, formed the Association of Shoemakers in 1675, purchasing land which was within the area bounded by Maiden Lane and Ann Street on the south and north, by Broadway on the west, and by a line between William and Gold Streets on the east. The tan pits appear to have been located on the present north-east corner of Maiden Lane and William Street. (Valentine's "History of New York", pp. 277-278; B. M. Brink's "Olde Ulster", volume 6, p. 333; and Wilson's "Memorial History of the City of New York", vol. 2, p. 19).

Coenraet, and Barent Hymdersen received a deed from Wessel Everts for a lot at the Crippel Bush, Manhattan Island, on Nov. 15, 1652. (Dutch MSS, vol. H-H, Deeds, p. 5; and Col. v. 1, page 576). This may have been the property lying on the west side of the marsh, and some 220 feet back of the Great Highway (now Broadway), and 135 feet north of the Old Ditch Road, - now Beaver Street. (Leslie's History of the Greater New York).

The third market built in New York City was on Great Dock Street and was first called "Lower Market", and afterward, "Coenties' Market, from Conraet Ten Eyck who lived at the side of the same, and who was familiarly known as Coentje, - pronounced nearly like Quincy. (Holland Society Yearbook for 1916, page 74). Coentie's Lane, -running alongside the "Stadt Huys", - and Coenties Slip, -still bearing the same name- also derived their names from Coenraet, as the land in the vicinity belonged to him. Ten Eyck Slip also was named for him, as well as Ten Eyck's and Vincent's Well, located in Broad Street, between Stone and South William Streets, it having been one of the City's ten wells. (Maude Wilder Goodwin's "Historic New York", vol. 1, pp. 44-45, 200; and B. M. Brink's "Olde Ulster", vol. 6, pp. 333-334). He owned a house on the north side of Pearl Street, next west of Stadt Huys Lane (City Hall Lane) which ran between his property and the old city hall. He also owned lots on the south side of Pearl Street, then the water front of the East River, as well as on the east side of Coentie's Slip. (Olde Ulster, vol. 6, p. 333). It appears, therefore, that he was interested in real estate, and it is said that he bought and sold many parcels.

He was a Lance-Corporal, 3rd. Company, Burgher Corps of New Amsterdam in 1653.

Several records involving Coenraet are included in Fernow's "Records of New Amsterdam, Minutes of the Court of Burgomasters and Schepens, 1653-1674, and altho most of them are relatively of

a minor nature, a few are of sufficient interest to warrant their inclusion as a part of this chapter. For the sake of brevity they are listed as a group.

The first case of record, took considerable time before it was settled. With the first entry dated Mar. 17, 1653, and with subsequent entries bearing dates of Mar. 24, April 21, May 5, August 11, 18, 25, Sept. 1, Dec. 8, all phases of the case had been disposed of by Feb. 1, 1655. (Vol. 1, pp. 71, 76, 83, 84, 93, 101, 108, 112, 143, 280). The litigation involved a hogshead of tobacco, originally in Coenraet's possession, which had later reached the hands of Allard Anthony, when Coenraet demanded it be returned. Antony claimed, and failed in his effort to prove, that Coenraet had consented to his keeping the tobacco. Coenraet denied that he had given such consent, and Antony demanded that he, (Coenraet), prove that no consent had been given. Further charges by Coenraet revealed that violence had been done him by Antony, and altho it appears to have developed that consent had been given to Antony to keep the hogshead, a denial was made by Coenraet that he had given his consent to open it. His request that he be permitted to remove the hogshead was granted, but a delay was encountered in the final delivery of it, during which time Antony deposited wampum in the value of 51 guilders, 18 stivers, (about $21), in the secretary's office as security for the delivery of the tobacco. Hendrick Willemsz and .....Frederickse became sureties for Coenraet for the payment of the wampum which he was permitted to take as security. (Dutch Records in the City Clerk's Office, New York, in Holland Society Yearbook for 1900, at page 170). The tobacco was evidently returned, and the court ordered that the wampum be returned to Antony, as Coenraet had been satisfied.

Nov. 15, 1655.

Coenraet brought an action against Jan Carstersen for payment of a debt of 204 guilders, 8 stivers (about $82), which had been owed since the year before. Admitting the debt, Jan claimed he had paid in wampum and that he had no beavers with which payment could be made according to the contract. Holding that the contract was valid, the court ordered that he pay accordingly. (Vol. 1, pp. 399-400).

Mar. 8, 1661.

He was sued by Abel Hardenbroeck and Pieter Jenszen Schoel, who demanded that he free them from the "watch" money. Coenraet requested that they pay him for the money which had been disbursed to them to pay for their passage from Holland, adding that they were lazy and that he had discharged them as he had no services from them. He complained of force and violence committed on him, and the schout (sheriff) asked that they be imprisoned, which was so ordered. On Mar. 15, the court ruled that they had no case against Coenraet, and they were ordered to pay the "watch" money, and conduct themselves honorably and loyally toward their master. (Vol. 3, pp. 275, 280-281).

Feb. 24, 1664.
As one of several citizens, he loaned 200 guilders ($80), at interest, to the city to finance the strengthening of the fortifications of the city. (Vol. 5, p. 30).

Sept. 27, 1664, Old Style.
He sued Albert Albertsen ter Heun for 65 guilders , 10 stivers (about $26) in wampum resulting in ter Heun's request for a delay in payment until Christmas. (Vol. 5, pp. 126-127).

May 23, 1665.
Coenraet was appointed an inspector in connection with the dispute involving a water drain between Hendrick Willemsen , and Annetje Gerrits, widow. (Vol. 5, p. 238).

June 20, 1665.
He appeared in court to testify concerning a riot on the day before, in which he was attacked by one of three soldiers who had ordered everyone to go home and attend to his business. Several witnesses appearing in his behalf, testified that Coenraet had been struck with a sword. (Vol. 5, pp. 260-262). These soldiers were English, the Dutch then having been under English rule.

Aug. 4, 1668.
In a suit involving wilful damage to the tan pits, Coenraet was appointed by the court as one of a two man commission to inspect the damage and to report their findings. The case was continued Sept. 4. (Vol. 6, pp. 142, 146).

Sept. 29, 1670.
He appeared with three other shoemakers and brought suit against Arian and Stoffel van Laer, complaining that they neglected to grind or pound their tan according to agreement. It was claimed by the defendants that it was impracticable to do this at the price mentioned, stating that they had the right to void the contract on condition of first giving the shoemakers one year's notice. (Vol. 6, 273).

Coenraet was made a small burgher of New Amsterdam, April 13 1657. (O'Callaghan's "Register of New Netherland, 1626-1674", p. 177). An explanation of the burgher system is included in the chapter on the Lubbertsen family. Coenraet was nominated for the post of Schepen (Magistrate) of New Amsterdam, Jan. 29, 1657, (see Records of New Amsterdam, vol. 2, p. 283), and again on Aug. 16, 1673, when the council of war, meeting in the city, ordered the inhabitants to nominate fifteen schepens from among the wealthiest of their number. (Docs, vol. 2, p. 574; and Records of New Amsterdam, vol. 6, pp. 395-397).He failed of election both times.

He gave his bond , August 4 , 1661 , to prove that duties on certain goods had been paid in Holland after which the goods were released to him, (see Dutch MSS, vol. 9, p. 720; and Cal. v. 1,p.

227), and was appointed one of three overseers, April 20, 1669 in connection with having those persons living between the shore and the first bridge improve the street so people "may drive on, walk over it". (Fernow's "Minutes of the Orphanmasters Court of New Amsterdam, 1655-1663", vol. 2, pp. 172-173).

By a notarial act passed January 2, 1664, Coenraet Ten Eyck and Poele Roelofsen were appointed by Aeltje Lubbers, as guardians of her son, Victor Dickers, then eleven years of age. (Dutch Records in the City Clerk's office, New York City, transcribed on pp. 125-126 of the Holland Society's Yearbook for 1900). On Oct. 9, 1666,-the mother then being deceased,-the guardians petitioned for payment of the interest on the 2000 guilders which had been loaned to the city in 1664, as it was the source of support for Victor, as well as for Tryntje Dickers, a daughter by a former marriage of Aeltje's husband. The guardians also requested that from then on, the interest be paid when due. They were asked to wait a little longer. Payment not having been made, another petition was made June 23, 1668 at which time it was requested that the interest, as well as the principal, be paid. Still unpaid, in 1669, a similar petition was made on March 2. Payment was held up pending the return of Gov. Nicolls from Long Island. (Records of New Amsterdam, Minutes of the Court of Burgomasters and Schepens, 1653-1674, by Berthold Fernow, vol. 6, pp. 38-39; 138; 170-171). Coenraet and Poele were sued by Johannes Harberding, Feb. 7, 1671 for 200 guilders in wampum, owed him for teaching Victor Dickers the shoemaker's trade and for expenses connected therewith. Acknowledging the debt, the guardians of the child claimed they had no more property of the child, with which to pay the debt, except for the money which had been loaned to the city and for the repayment of which they had repeatedly requested. The case was continued on Mar. 28, at which time they were ordered to pay within three months and to refer their difficulties concerning the 2000 guilder loan to the Governor for settlement. (Records of New Amsterdam, vol. 6, pp. 282; 288-289). A record on the orders relative to a subsequent petition regarding the 2000 guilder loan, dated Dec. 5, 1671, is included on page 37 of vol. 3 of the council minutes, and is referred to in "Calendar of Council Minutes, 1668-1783", in the New York State Library Bulletin #58 March 1902 History 6, at page 15. On June 26, 1674 another petition was made and the guardians were requested by the court to speak to the Governor to make the matter as sure as possible for the advantage of the orphans. (Records of New Amsterdam, vol. 7, p. 104). No further record has been noted of the case.

Coenraet was one of the signers of the remonstrance against Governor Stuyvesant's course of action in attempting to defend the city against the English in 1664. (Docs. v.2, pp. 248-250). During the period from Oct. 21-26 of the same year, following the surrender of the Dutch to the English, he appeared and took the required oath of allegiance to the English crown. (Docs. v.3, p. 75). He was listed Mar. 17, 1674, as having property worth 5000 guilders ($2000), a large sum for that period. (Docs. v.2, page 699).

His name appears on a tax list dated Nov. 10, 1676 , for defraying the charges of the new docks and for paying the city's debts. (New York Genealogical and Biographical Record, v. 2, page 36).

He was a member of the Reformed Dutch Church, and at various times was an elder and deacon. At a church meeting called in 1680 for the purpose of considering the best way to raise money for a new church building, he voted for a free will gift, rather than a public tax.

Coenraet was twice married. His first wife, and the mother of all his children, was MARIA BOELE, who died prior to April 15, 1682, when Coenraet, then a widower , married as her third husband, Annetje Daniels. (Collections of the New York Genealogical and Biographical Society, v. 1, p. 51). She was the widow of Herman Smeemans, widower, whom she married Dec. 1, 1668.(Collections of the N. Y. Gen. and Biog. Soc. v. 1, p. 33). At the time of that marriage she was the widow of Joseph Waldron, whom she had married prior to 1657, and by whom she had three children; Annetje, bp. Sept. 23, 1657; Debora, bp. Aug. 31, 1659, and Jan, bp. April 24, 1661. (Collections... v. 2, pp. 47, 53, 60).

Dominie Selyn, the minister of the Dutch Church , prepared a list of the church members in 1686 , and Coenraet and his second wife are recorded as residents on the "Breede Weg" (Broadway) . (Valentine's "History of the City of New York", p. 331; and Pellstrau's "Genealogical and Family History of New York, v. 1, p.38)

Coenraet's first wife, Maria Boele, may have been a member of the Boelen family, of whom a record is given in vol. 72 of the New York Genealogical and Biographical Record, pp. 265 to 294 , incl. Maria is not mentioned in the record, yet there appears to have been some connection between the families of Boelen and Ten Eyck, the latter name occurring frequently in connection with the records of the former.

Coenraet died sometime between Sept. 4 , 1686 , when he made his will , and April 5, 1687 when it was proved. He approved of the matrimonial conditions made with his second wife, whereby she was to have 2000 guilders ($800), and upon which he had paid 1650 guilders, leaving 350 to be paid her at once. One of his sons was to receive the use of 2000 guilders for four years , which was to come from the sale of Coenraet's houses , and another son was to receive the use of the rent of his two houses for one year, after which time , the money was to be returned without interest and thrown into the common estate. One of these sons, and two others, were given the preference to acquire the tannery , provided they pay a reasonable price or rent, which was also to be thrown into the common estate. The seven surviving children were to share in the common estate, share and share alike. Four sons were named as executors. (Collections of the New York Historical Society, vol . 1 of Abstracts of Wills, pp. 143-144 , recorded in Liber 3-4 at

p. 57, 58; and New York Genealogical and Biographical Record, v.2 p. 39).

It is said that he was buried on the site of the old post-office. (Snell's "History of Hunterdon and Somerset Counties, New Jersey", p. 601).

Coenraet and his first wife, Maria Boele, were the parents of eleven children, seven sons and four daughters. Of these, two sons and a daughter were born in Holland, the others having been born and baptized in New Amsterdam in a period from 1651 to 1664. The seventh child and fifth son was:-

8. HENDRICK TEN EYCK, bp. April 30, 1656 in the Dutch Church in New Amsterdam. (Collections of the New York Genealogical and Biographical Society, vol. 2, p. 42).

The first public record of him is dated Nov. 24, 1675, when he took the oath of allegiance to the King and to James, Duke of York.

He appears to have lived in Kingston, Ulster County, N. Y., for a time, as he was appointed gauger there, Dec. 10, 1682. (B. M. Brink's "Olde Ulster", vol. 3, p. 234). He was probably there as late as 1686, his name appearing on a county record made April 26. (New York Genealogical and Biographical Society's "Record", v. 2, p. 146). It is also to be noted that his name does not appear in the church membership list of New York City, prepared by Domine Selyns in the same year.

His father's will of 1686 names him as one of the executors.

The earliest record of his subsequent residence in New York City, can be ascertained from the council minutes dated Dec. 26, 1687, in which his name appears. (Council Minutes, volume 5, page 215; and Calendar of Council Minutes 1668-1783 in New York Library Bulletin #58, March 1902, History 6, p. 57).

In 1689 he was one of the fifty men under Jacob Milbourne, son-in-law of Lieut. Gov. Leisler, who were sent against the recalcitrant citizens of Albany. He was an assistant alderman in New York in that year, and on Dec. 17, received a commission as a Lieutenant of Foot in the North Ward of the city. (English MSS, v. 26, p. 142; Cal. v.2, p. 187; and O'Callaghan's "Documentary History of the State of New York", vol. 2, p. 137 in the 4to. ed. of 1850, and p. 3[illegible] in the 8vo. ed. of 1849).

On Sept. 7, 1690, he was a member of the Court of Admiralty appointed by [illegible] to hear the case against the several ships captured from [illegible]nch. (O'Callaghan's "Documentary History of the State of New [illegible]k, vol. 2, pp. 291-294 in the 8vo. edition of 1849, and pp. 1[illegible]-165 in the 4to. edition of 1850).

On Oct. 30, 1690, Lt. Gov. Leisler commissioned Samuel Edsall, Thomas Williams and Hendrick Ten Eyck, and ordered them, either singly or collectively, to take command of a sloop and to proceed to Flushing Bay in Long Island Sound, there to examine all vessels, as well as suspected houses and secure all persons suspected of sedition, together with their papers. (English MSS vol. 36, p. 142; Col. v.2, p. 199; and O'Callaghan's "Documentary History of the State of New York", v. 2, pp. 309-310 in the 8vo. edition of 1849, and pp. 174-175 in the 4to. edition of 1850).

Hendrick was a member of the Colonial General Assembly from Orange County in 1710-1713).

He married, March 21, 1676, PETRONELLA DE WIT of Leyden, Holland. (Collections of the New York Genealogical and Biographical Society, vol. 1, p. 41). She was the daughter of JOHANNES DE WIT and JOHANNA..... Her father died before Oct. 1, 1670, when his widow, Johanna, married Mathias De Haert, widower, the record naming her as the widow of Johannes De Wit. (Collections, vol. 1, page 34). She married third, John Hendrick De Bruyn, who died before Nov. 30, 1709, when Johanna, then his widow, made her will. A codicil was added Aug. 30, 1710, and the will was proved Jan. 20, 1711. A study of the will makes possible the compilation of data relative to her children:-

A. PETRONELLA DE WIT, named as the eldest daughter. Property consisting of a house and lot, was bequeathed to her four children, "but her husband, Hendrick, is to have no share thereof". The will continues, "I desire that my daughter, Petronella, be not dissatisfied, for my gift is not made through any disrespect to her, but because her husband, who deserves so little at her hands should reap no ber fit". The property was located at #35 Pearl Street and the lot in the rear on Bridge Street.

B. Sophia, named as the second daughter. Wife of .... Teller and mother of at least two children, Johanna and Elizabeth, who were bequeathed a house and lot located at #63 Pearl Street. From the information given, it has not been determined whether Sophia was the daughter of De Wit or De Haert.

C. Johanna, named as the third daughter, and wife of David Jamieson. She inherited a house and lot located at #34 Pearl St. The writer has not carried the investigation to the point of determining whether her father was De Wit or De Haert.

D. Catherine wife of Lancaster Symes and earlier the wife of James Larkins. Reference to her uncle as Balthazar De Haert, and to her father Mathias De Haert, establishes the fact that she was a daughter by her mother's second marriage. She inherited a lot located on the north side of Exchange Place, a little east of Broad Street.

Several specific bequests of money were made, and the residue was to be divided into three parts, one part to be divided a-

mong the four children of Petronella, and the other two parts going to Johanna and Catherine. Before the latter, or her husband, received any benefit from the estate, they were to convey to the other three daughters, all claim to the estate of Balthazar and Mathias De Haert, or anything due James Larkins, first husband of Catherine. (Collections of the New York Historical Society, vol. 2 of Abstracts of Wills, pages 51-53. Recorded in Liber 7, at page 603). The locations of the various properties are given in a footnote to the abstract of the will.

John Hendrick De Bruyn, third husband of Johanna, died before June 20, 1709, when his will was proved. Made Oct. 11, 1702, it makes no mention of any children of his own. (Collections of the New York Historical Society, vol. 2 of Abstracts of Wills, p. 25, recorded in Liber 7 at page 536; and referred to in "Calendar of Wills on File at Albany", p. 99).

Hendrick Ten Eyck died intestate before July 1, 1721, when letters for the administration of the estate were granted to his son, Johannes. Petronella died intestate before Oct. 27, 1724, at which time letters of administration were issued. (Collections of the New York Historical Society, vol. 2 of Abstracts of Wills, at pp. 235, 300; recorded in Liber 9 at pp. 240, 508).

They were the parents of nine children, five sons and four daughters, born in a period from 1676 to 1697, and all baptized in New York City, except for one daughter who was baptized in the city of Kingston, in Ulster County. The third child, who was also the third son, was:-

45. COENRAET TEN EYCK, baptized Sept. 13, 1680 in New York. (Collections of the New York Genealogical and Biographical Society, vol. 2, p. 143). Information of him is meager. He was married and living in Somerset County, N. J., as early as July 27, 1719, when he and his wife were witnesses at the baptism of Catherine, daughter of Jacob Ten Eyck, a cousin of Coenraet. (Raritan,- now Somerville,- Reformed Dutch Church records in the Somerset County Historical Quarterlies, vol. 2, p. 209). Coenraet was one of the original supporters of the North Branch (Later Readington) Church when it was organized in 1718-1719. (Snell's "History of Hunterdon and Somerset Counties, N. J.", p. 496; and Messler's "Memorial Sermons and Historical Notes of the Reformed Dutch Church in Somerset County", p. 239).

Of his wife nothing is known, beyond the fact that her name was CATHERINE.....

They must have either married during middle age, or had other children than those of whom records have been found. The records of the Readington Church list only two baptisms, namely:-

121. CATHERINE TEN EYCK, baptized Nov. 17, 1722. (Somerset County Historical Quarterlies, vol. 4, p. 143).

12?. Coenraet Ten Eyck, baptized Aug. 11, 1728. (Quarterly, vol. 4, p. 242).

The fact that Coenraet, (#45), was 42 years of age when his supposed first child was born ; and the fact that a six year interval is shown to have elapsed between the birth of this child and the second one for whom a baptism is recorded , suggests the possibility that there may have been other children of whom no records exist.

CATHERINE TEN EYCK (#121) married on, or shortly after, April 29, 1745, GERRIT VAN WAGENEN, (#44 in the Van Wagenen genealogy). (Archives of the State of New Jersey, vol. 22, Marriage Licenses, pp. 403, 417). She was living Oct. 12, 1776 when she witnessed the will of her brother, Coenraet, (#122). (Archives of the State of New Jersey, vol. 34,- Abstracts of Wills, vol. 5, p. 519). Recorded in Liber 1P, at page 335 .

Her mother, and her father, Coenraet Ten Eyck (#45) , were living as late as May 3, 1747, when they were witnesses at the baptism of her daughter, Catherine Van Wagenen. (Somerset County Historical Quarterlies, vol. 4, p. 304). Other data of her children and descendants is included in the Van Wagenen genealogy of 1884 ; the writer's compilation of 1942 , and in the Van Wagenen appendix to this volume.

CHAPTER VIII

BOGART LINE

The name Bogart, or as originally spelled, Bogaert , is said to signify "orchard" , and has been interpreted as an indication that the ancient members of the family were horticulturists.

Commenting on the family , in his "New Netherland Register", Mr. Dingman Versteeg adds that there were twelve or more distinct families of the name, or derivations thereof, included among the early Dutch settlers , and that it is doubtful if any other name was so numerously represented by separate lines, some having been related, and some not.

The line with which this chapter is concerned, descends from TEUNIS GUYSBERTSEN BOGART, whom the writer prefers to describe as the earliest known ancestor of the family. At least one compiler, S. V. Talcott , in his "Genealogical Notes of New York and New England Families" (1888), has included in the records of the family on pp. 22-63, a lineage carrying back through three more generations, based apparently on a supposed, rather than a factual relationship. No evidence has been seen which would corroborate Talcott's conclusions ,- his records, however, are of such interest to warrant their inclusion with this chapter , but with the admonition that the known facts appear to indicate little, if any, probability that the line can be traced farther than Teunis Guysbertsen Bogart, other than to establish that his father probably was named GUYSBERT.

The numbers assigned in this chapter to the various individuals are the same as used by Talcott, but only to the extent that he has provided them.

1. Teunis Bogart was a resident of Schoenderwoert , a small village in the south of Holland, situated very near Leurdam where he possessed a homestead and had children, one of whom was:-

2. Cornelis Teunissen Bogart, who was born in Schoenderwoert and married Beeltje (Cornelis). They lived at the homestead , and died there prior to 1661. They had at least two sons:-

3. Cornelis Cornelissen Bogart, born in Schoenderwoert , who was the progenitor of the Albany families, and:-

4. Guysbert Cornelissen Bogart, also born in Schoenderwoert.

Talcott has based the preceding lineage on a document in the Albany records, a transcription of which is included on page 106 of volume 3 (Notarial Papers, 1660-1696) of "Early Records of the City and County of Albany and Colony of Rensselaerswyck", reading as follows:-

Sept. 3, 1661. Guysbert Cornelissen Bogart (#4) and Cornelis Cornelissen Bogart (#3), brothers, appeared before .... a notary public , Guysbert Bogart dwelling in Catskill and Cornelis Bogart in Rensselaerswyck , acknowledging, said Guysbert Bogart that he had sold, and he, Cornelis Bogart that he had bought of him, a just child's portion, to wit, a one-fourth interest in a farm lying in the jurisdiction of Schoenderwoert, in Holland , received by him by inheritance and descent on the death and demise of Cornelis Theunisz Bogart , their father , and of their mother Beeltje Cornelisz at Schoenderwoert aforesaid , for which just one fourth interest in said farm, he, Guysbert Cornelis , acknowledges that he has been fully paid and satisfied by the hands of his brother, ... aforesaid, therefore giving him full power and authority to take possession of said one-fourth interest and to do therewith as with his own patrimonial estate. ..... Done at the Colony of Rensselaerswyck. (Guysbert signed with his mark, Cornelis with his signature).

Talcott is of the opinion that there was at least one more son of Cornelis Teunissen Bogart, whom he also names. Judging from the foregoing record, however, regarding a child's just portion, "to wit, a one-fourth interest", it is not improbable that there were four children.

Talcott, without indicating the source of his information , states that Guysbert (#4) was in New Amsterdam in 1640 , when in September of that year he leased a part of a plantation on Manhattan Island from Jacob Van Corlear (or Van Curler). He was still there in 1642 and was supposed to have been a widower then. He was in Catskill prior to the autumn of 1661 , as evidenced by the record just quoted, and married there, in 1663, as his second wife, Mary, the widow of Jan Jochems (Halder). There were no children from this marriage. While he resided in Catskill , he gave to his stepson, Helmer Jansen, his homestead and farm , at that place, where it is supposed he died between 1684 and 1699 . His stepson petitioned for a patent for this land Feb. 9, 1699 , and obtained it in 1702. The petition showed that Guysbert Bogart and Helmer's mother owned lands on the north side of the Catskill Creek, at its entrance into the Hudson River, as early as twenty years prior to the date of the petition , and that they afterward purchased these lands from the Indians on June 20, 1684, "as doth appear from deed in full recorded in Albany". (English MSS, vol. XLII, p. 135; and Cal. vol. 2, p. 266). The land reverted to the province of New York, Helmer Jansen having left no heirs.

A lease for land at Coxsackie, dated Nov. 11 , 1675 , is referred to as "with house, barn and land heretofore used by Guysbert Bogart. (Early Records of Albany, v. 3, p. 333).

Guysbert Bogart is also mentioned in a record dated June 8 , 1668 , a copy of which is included on page 4 of volume 14 of the Yearbooks of the Dutch Settlers Society of Albany, N. Y.

Altho Talcott states that Guysbert had four sons, this probably has been based solely on the fact that these four persons bore the name Guysbertsen, meaning "son of Guysbert". That their last name was Bogart is not, in itself, sufficient evidence upon which to base a family lineage, as they could well have been sons of some other Guysbert Bogart. This appears all the more logical, when it is considered that Guysbert (#4), willed his property to his step-son, when normally it would have been left to his own children, had he been the father of any. Mr. Vanstoeg, previously quoted, while admitting the possibility that Guysbert (#4), may have been the father of Teunis Guysbertsen Bogart, -said by Talcott to have been one of the four sons,-also expresses the opinion that Guysbert left no children.

One of the (supposed) sons of Guysbert Cornelissen Bogart is said by Talcott to have been:-

11. TEUNIS GUYSBERTSEN BOGART. Of his birth we have no record, but a later entry in this chapter shows that he was from the village of Heykoop, province of Utrecht, Holland, located only a couple of miles from Schoenderwoert, from which place had come Guysbert (#4) as well as Jan Louwens Bogart, of whose will Teunis Guysbertsen Bogart (#11), was named one of the executors. (See a later entry in this chapter). The close proximity of the two Holland villages, and the fact that Teunis (#11), of Heykoop, was in some way related to Jan Louwens Bogart of Schoenderwoert, justifies the statement that Teunis was probably related in some way to Guysbert (#4), who has been credited by Talcott as having been Teunis' father. It is of interest to observe that an article in the "National Genealogical Society Quarterly", volume 29, p. 9, states that Teunis' great-grandfather was Jacob Bogart, the first physician to the city of Antwerp, and for 35 years Professor of Medicine at Louven, Holland. No proof is given however, as to the relationship, so it must still be said that Teunis was the first known ancestor of the line with which this chapter is concerned.

The New York Genealogical and Biographical Record, vol. 13, page 42, quoting page 84 of "Transactions of the American Institute of the City of New York", 1852, repeats the erroneous statement appearing in that record, that Teunis Guysbertsen Bogart and others, were the first men who began farming at the Wallabout (in Brooklyn), in 1625. Also in error is the statement in the "Somerset County (N. J.) Historical Quarterlies", vol. 5, p. 123, that he came to New Netherland in 1662, (from Heykoop, Holland). The date given, may be a typographical error, the intention probably having been to show the correct date of 1652.

The exact year of Teunis' arrival in New Netherland can be determined, however, from a documentary record covering the period from Sept. 26 to 30, 1687. During this time, the inhabitants were required to take the oath of allegiance to the English crown and Teunis is listed among those from Kings County, L. I., who appeared and took the oath, the record showing that he was a resident of Brooklyn, and that he had been in New Netherland for 35

years. The date of his arrival is therefore clearly set at 1652, and this has been accepted as correct by those who have included information of him in their particular works. (O'Callaghan's "Documentary History of the State of New York", vol. 1, p. 659 in the 8vo. edition, 1849, and p. 430 in the 4to. edition, 1850).

Versteeg's "New Netherland Register", vol. 1, pp. 93-96, included a brief account of Teunis, which has been incorporated in this chapter.

Apparently the earliest record of him is that of his membership in the First Protestant Reformed Dutch Church in Brooklyn, dated Mar. 12, 1660. (Stiles' "History of the City of Brooklyn", vol. 1, p. 425). Versteeg indicates, however, that he joined the church May 29, 1661, at which time he was listed as being from Heykoop, Holland.

He may have been the Teunis Guisbert who was chosen one of the schepens (magistrates) of Amersfoot (Flatlands), and Midwout (Flatbush), April 24, 1660. (O'Callaghan's "Register of New Netherland, 1626-1674", p. 79). If so, he evidently did not remain there more than a year, as evidenced by the church record of 1661 previously mentioned.

He was associated with his father-in-law, Joris Jansen Rapalje, and others, in 1660-1661, in a plan to plant a village on Long Island in sight of the Manhattans and Ft. Amsterdam. Brief details of this venture are included in the Rapalje chapter.

He petitioned, with several others, on March 18, 1662, for a grant of land in the rear of Rapalje's property at the Wallabout, (in Brooklyn), and the request was granted March 30. This land was located in a district then called Bedford. (Dutch MSS, vol. 10, p. 88; Cal. v. 1, p. 235; and Doc. v. 14, p. 510).

That he may have operated a sawmill, preparing lumber for export, may possibly be inferred from a court record dated August 29, 1662, in New Amsterdam (New York). At that time he instituted a suit against skipper Pieter Janssen Emilius for payment for 300 pieces of clapboards at 24 guilders ($8.00) per hundred, payable in linen at 3 guilders the "ell". Emilius claimed his cooper bought the wood on condition that he could ship them. Bogart claimed he bought 600 pieces and that it was not on condition it could be shipped. He also said that the cooper had paid for only half the boards. His testimony was corroborated by the cooper and Emilius was ordered to pay the balance according to the contract. (Records of New Amsterdam, Minutes of the Court of Burgomasters and Schepens, 1653-1674", by Berthold Fernow, vol. 4, p. 124).

He was elected a deacon from the Wallabout district in the Brooklyn Reformed Dutch Church, Feb. 21, 1663, and elder on Feb.

27, 1664. (Stile's "History of Brooklyn", vol. 1, p. 429). He was still an elder in May 1670. (Versteeg, p. 93).

He was selected as a schepen of Brooklyn, Mar. 19, 1663 , by the Director-General and Council , from nominations made by the incumbent schepens and schout (sheriff). (Docs. v.14, p. 502; and "Register of New Netherland", p. 75).

He was a delegate to a convention held at Midwout (Flatbush) L. I., on Feb. 27, 1664, for the purpose of sending a delegation to Holland to lay before the States-General and the West India Company, the distressed state of the country. (Register of New Netherland, pp. 145-146). This is probably the same record which appears on pp. 374-375 of Docs. v. 2, in which the name is given as Joris Guysbertsen Bogart. His name sometimes appears as Tonis, and it is believed by Versteeg that the name was mistakenly copied as Joris, in the Manuscript translations. The convention was held as a result of Capt. John Schot's raids on Dutch villages on Long Island, and preceeded by only a short time, the conquest of New Netherland by the English.

He also represented Brooklyn at the Hempstead convention in 1665. (Bergen's "Register of the Early Settlers of Kings County , L. I.", p. 41).

On April 5, 1667 , he obtained a confirmatory patent, in his own name, for a tract of land comprising 200 morgens (400 acres), which had been in the possession of Hans Hansen Bergen, the widow of whom he had married several years previously. A brief account of the history of this patent, its location (in Brooklyn) , and a probable explanation as to his reasons for obtaining the patent in his own name instead of in the names of the children of the deceased Hans Bergen, is included in the Bergen chapter. Mr. T. G. Bergen has made what appears to be a thorough search of Kings County (L. I.) records for the purpose of establishing the chains of title for various properties of the Bergen and related families, and the results of his efforts are included in his "Bergen Family" (1876). He apparently was not able to definitely account for the disposition of all the property which was patented to Bogart, but mentions, that in the absence of a record of his will , or of details of the division of this property to his children . it may be reasonable to presume that Tounis' (only) son, Guysbert Tounisson Bogart, may have inherited the whole patent. Tounis was still in possession on March 27, 1704 , per a deed of that date , in which land bounding the premises of the plantation of Rem Jansen Vanderbeeck on the north, is described as belonging to Tounis Guysbertsen Bogart This date, incidentally, may have been the last record of his being alive. His son Guysbert, later came into possession, either by will or purchase, of at least part, if not the whole, of the westerly part of the patent.

Tounis Guysbertson Bogart was a schepen of Brooklyn in 1667. (Bergen's "Register of the Early Settlers of Kings County, L. I.", p. 41).

On Oct. 18, 1667, Gov. Nicolls granted to Bogart and others, representing the freeholders and inhabitants of Brooklyn, a patent to all the land then comprising the town, as well as other parcels which had been or were to be purchased for the town, and on May 13, 1686, again representing Brooklyn, Bogart was one of the representatives who received a ratification and confirmation, of the patent from Gov. Dongan. (Stiles' "History of the City of Brooklyn", vol. 1, pp. 155, 201).

He was named as one of the two executors of the joint will of Jan Louwens Bogart and his wife, Cornelia Everts, made Sept. 6, 1671, in Harlem. Jan was from Schoenderwoert, Holland and was evidently a kinsman of Teunis Bogart. (Riker's "Harlem, its Origin and Early Annals", pp. 108-109; 307).

The council of war, meeting at Ft. William Hendrick, August 18, 1673, during the brief period in which the Dutch had regained control of New Netherland, selected Teunis Guysbertsen Bogart as one of the schepens of Brooklyn. He still held the position March 26, 1674. (Docs. v. 2, pp. 577, 702; and O'Callaghan's "Register of New Netherland", p. 75). On the latter date he was one of the delegates to a convention held at New Orange (New York City), for the purpose of conferring with Gov. Colve. (Register of New Netherland, p. 149; and Docs. v. 2, p. 702).

He was listed on the assessment rolls of Brooklyn on August 20, 1675, with a property valuation of £ 327; September, 1676 the valuation was £331, and September 26, 1683, the valuation was £246. All listings included 60 acres of land and valley, and the decline in the valuation is reflected in the decreased number of farm animals. His name also appears in a list of freeholders of the town of "Brookland", about 1698. (Stiles' "History of the City of Brooklyn", vol. 1. pp. 432, 433, 436, 438). His assessments were the largest on the rolls.

During most of his residence in New Netherland, he appears to have lived at the Wallabout in Brooklyn. (Stiles' "Brooklyn", vol. 1, p. 426). He signed documents with his signature.

He was one of the trustees and overseers of Brooklyn in 1676 1677 and 1678. (Bergen Family, p. 53).

Teunis Guysbertsen Bogart married, as her second husband, SARAH RAPALJE, dow of Hans Hansen Bergen. The record of their marriage has not been seen, but the period in which it took place was sometime between Sept. 21, 1655, when her 7th child by her first marriage, was baptized in New York (Collections of the New York Genealogical and Biographical Society vol. 2, p. 35), and the early part of 1655, on Dec. 19 of which year, Bogart's first child was baptized, (Collections, vol. 2, p. 40). Details of the ancestry of Sarah Rapalje are included in the Rapalje chapter.

Sarah is said to have died before 1685, and certainly before Nov. 11, 1687, when Bogart, then a widower, married Geertje Jans (Langendyck), widow and second wife of Dirck Jansen Dey, of the Wallabout (in Brooklyn). (Collections of the New York Genealogical Society, vol. 1, p. 63). She was from St. Marten, in North Holland. (Pre-Revolutionary Dutch Houses and Families in Northern New Jersey and Southern New York, by Miss Rosalie Fellows Bailey, p. 504). Several records of the Dey family are included in the "History of the Tremain, Tremaine, and Truman Family", by E. M. Tremaine and M. E. Poole, vol. 1, pp. 741-889. The census of 1698 for Brooklyn, lists Bogart as living alone.

Mr. T. G. Bergen may have been the first to compile a list of the children of Tounis Guysbertsen Bogart and Sarah Repalje. His revised "Bergen Family", 1876, pp. 74-75 lists seven children born to this marriage, six daughters and one son, born in a period from 1655-1668, and all baptized in the Reformed Dutch Church in New Amsterdam (New York City), except the fourth child who was baptized in Brooklyn.

Talcott, in his volume of 1883, p. 28, and Stoutenburgh, in his "Documentary History of the Dutch Congregation of Oyster Bay, L. I.", 1902, pp. 148-149, also list the same children. Bergen, however, in possible contradiction of his earlier work, includes in his "Register of the Early Settlers of Kings County, L. I.", 1881, p. 41, the names of three supposed additional ones, namely Adrian Teunissen Bogart, Grietje Teunissen Bogart, and Cornelis Tounissen Bogart. This was probably the source for the statement appearing in the "Somerset County Historical Quarterlies", vol. 4 pp. 74-75, that Bogart had ten children, and for the account in the same Quarterlies, volume 5, p. 123, which names as Bogart's sons, not only Guysbert, but also Cornelis and Adrian. These assumptions have probably been made solely because the three individuals bore the name Teunissen, meaning simply that they were children of some one named Teunis. It does not necessarily follow that they were sons of Teunis Bogart, in fact there is little to support such a theory.

Adriaen Bogart, to whom Bergen refers on page 40 of "Register of the Early Settlers of Kings County, L. I.", was more likely to have been a son of Guysbert Cornelissen Bogart (#4), as he is known to have married, as his second wife, Belitje Post, Sept. 4, 1685. Had he been a son of Teunis, his birth could not have occurred earlier than 1663, and it is unreasonable to presume that he was already a widower at the age of 22 when he took his second wife. (Collections of the New York Genealogical and Biographical Society, vol. 1, p. 58).

Bergen, in his "Register of the Early Settlers of Kings Co., L. I.", page 41, has referred to Cornelis Teunissen Bogart, supposed son of Teunis (#11), as the Cornelis who settled on the Raritan River, in New Jersey, and whose first child was baptized on April 25, 1711. In examining the baptismal records of his children, as shown in vols. 2 and 4 of the Somerset County Historical Quarterlies, it is found that his name is given as Cornelis Bo-

gart, and his wife's name as Cornelia. A copy of the baptismal record of their first child is included on page 139 of vol. 2 of the Quarterlies. The fact that he was the father of several more children suggests that he was probably a young man at the time of his marriage (about 1710), and that it is most unlikely, therefore, that he could have been a son of Teunis.

That Greetje Teunissen may have been a daughter of Teunis, is possible. The baptismal records show a break of four years between 1661 and 1665, during which period no baptisms are recorded for Teunis Guysbertsen Bogart. The fairly uniform sequence of two year intervals between the baptisms of the rest of the children, does suggest that Greetje could have been another daughter, and born about 1663, a date which has been alluded to in connection with Adriaen, who evidently was not born in that year.

Teunis Guysbertsen Bogart probably had but one son, his last child:-

.52. GUYSBERT TEUNISSEN BOGART, bp. Dec. 5, 1668 in New York. (Collections of the New York Genealogical and Biographical Society, vol. 2, p. 93). Information of him is meager.

Bergen, in his "Register of the Early Settlers of Kings Co., L. I.", p. 41, has erroneously referred to him as having been a magistrate of Brooklyn in 1663, 1664, 1667 and 1675, probably deriving his account from O'Callaghan's "Register of New Netherland 1626-1674", pp. 81, 82, 145, 147-148, which refers to a Guysbert Teunissen as magistrate of Bushwick, one entry parenthetically identifying him as a Bogart. The impossibility of such records being correct is at once apparent when it is realized that Guysbert was not born until 1668.

The earliest record noted of him may be that in which he is listed as one of the inhabitants of Brooklyn who took the oath of allegiance to the English crown during the period from Sept. 26-30, 1687, his father also taking it during the same period, as noted earlier in this chapter.

He was included in the 1698 census as a freeholder of Brooklyn, his household consisting of one man, two women, five children. (Stiles' "History of the City of Brooklyn", vol. 1, p. 438).

He was a magistrate of Bushwick in 1707 according to Bergen, but here again, his association with Brooklyn may perhaps suggest that Bergen is in error, it not being reasonable to suppose that while a resident of one community he would have been an official in another.

He is mentioned as a deacon of the church at Brooklland Jan. 3, 1707. (English MSS, vol. LII, p. 4; and Cal. vol. 2, p. 351).

Bergen's searches for chains of title to lands in Brooklyn and vicinity show that on Dec. 22, 1729, Guysbert Teunissen Bogart conveyed to his son, Guysbert Bogart, Jr., 76 acres of land in Brooklyn for £675. This was property which had no doubt been obtained from his father Teunis Guysbertsen Bogart (#11), either by will or purchase, but of which there appears to be no record of conveyance.

Guysbert Teunissen Bogart is listed in the Brooklyn census of 1738 as having a family consisting of two males over ten years of age and two females over ten years. (Stiles' "History of Brooklyn", vol. 1, p. 439).

He married, April 16, 1689, as her second husband, JANNETJE SYMONSEN VAN ARSDALEN, a widow. (Flatbush Church records in the Holland Society Yearbook for 1898, p. 93). Her ancestry is given in the Van Arsdalen chapter.

They were the parents of six, or possibly seven, children. Talcott, page 34, lists three sons and three daughters. Bergen, in his "Register of the Early Settlers of Kings County, L. I.", p. 41 and Stoutenburgh's "Documentary History of the Dutch Congregation of Oyster Bay, L. I.", p. 145, include a fourth son, Cornelis Guysbertsen Bogart.

One of the sons listed by Talcott, page 34, as the fourth child and third son, was:-

126. GUYSBERT BOGART, Jr., of whose birth or baptism there appears to be no record. From the fact that no baptisms are found between 1693 and 1699, and from the fact that he married in 1719, it may be inferred perhaps, that he was born within a period from about 1695-1697. Bergen, in his "Bergen Family", 1876, p. 549, states that he was at one time a schepen of Bushwick (Williamsburgh), and owned and occupied the homestead farm. He purchased from his father, Guysbert Teunissen Bogart (#52), Dec. 22, 1729, for £675, 76 acres of land which had been a part of the original 400 acres owned by Hans Hansen Bergen. He sold this property June 27, 1741, to Jeremiah Remsen for £700. Bergen has given further information as to the succession of title, the property evidently never reverting to any member of the Bogart family. The land was in the western portion of the original patent, and Cornelis Bogart, a brother of Guysbert Bogart, Jr., probably owned the balance, the entire western portion having been of about 160 acres in extent. Cornelis, apparently by an unrecorded deed, probably conveyed his lands to his brother Teunis (#123). This property, too, eventually left the ownership of the gart family.

Guysbert, Jr., was listed in the 1738 census of Brookland, his family consisting of two males under ten and two females under ten, also two males over ten, and one female over ten years of age. (Stiles' "History of Brooklyn", vol. 1, p. 439). This record has an important bearing on the record of the family, which, judging from Talcott, pp. 41, 42, and the "Bergen Family", p. 549,

is incomplete in both works, the respective compilers listing but two children.

He is said to have died about 1768. (Bergen Family, p. 549).

He married,(Nov.) 17, 1719, MARRETJE BERGEN.(Flatbush Church records in the Holland Society Yearbook for 1898, p. 99). The ancestry of his wife is included in the Bergen chapter.

Talcott and Bergen list only two children, namely Jacob Bogart (#229), bp. April 7, 1723, and Jan Bogart (#230), bp.July 29 1733. No other records of birth or baptism have been seen by the writer, but it is apparent from the 1738 census previously quoted that there were probably at least five children , two daughters and two sons born after 1728 and one son, probably Jacob , born before 1728. The absence of any recorded baptisms between the years 1723 and 1733, suggests in itself that the family records, are incomplete, but does not rule out the possibility that these records have been preserved by some descendant.

A family lineage for Mr. George A. Vroom, appearing on page 179 of the 1905 Genealogical Record of the St. Nicholas Society of the City of New York, and on which his right to membership in the Society is based, shows that Guysbert Bogart, Jr., had a son named:-

GUYSBERT BOGART. The year of his birth is given as 1730, but this is evidently an error in typography, as the correct year of his birth will be shown to have been 1720. Mr. Vroom's lineage was probably based on records in the possession of the family, as no church record of the baptism of Guysbert has been seen by this writer.

GUYSBERT was therefore the first child of Guysbert Bogart , Jr., born the year following the marriage of his parents, by virtue of which he was the eldest child in a family which evidently consisted of at least six children, namely himself, and the five, who are listed in the 1738 census. 18 years of age, he may have then been living away from home, possibly in New Jersey. -

Guysbert's will, details of which are given later , includes valuable information relating to his family, and from it can be constructed the family record which follows.

He was twice married, first to Maria...., by whom he had one son, John Bogart who pre-deceased him. John had three children Maria, Fanny, and Sarah. Guysbert's second wife is not named in his will, and it is presumed that she had died prior to the making of the will. It will be shown later that her name was ELIZABETH BODINE. She was the mother of at least five of Guysbert's children, all daughters; Lamitje who married John Bellard and had Elizabeth; Catalina who married Benjamin Taylor; Elsie who married Peter D. Vroom; SARAH who married (first) Jacobus Stryker; and Jannetje who married Willet Taylor. The order given is the same

as it appears in the will, and it is presumed that it represents the order of their ages.

Very little information has been found concerning Guysbert. The records of the Readington; Raritan (Somerville); and Harlingen churches reveal nothing of him or of his family. That he was a descendant of Teunis Guysbertsen Bogart (#11), is evidenced from a letter written to the New York Historical Society, November 18, 1813, by his son-in-law, Peter D. Vroom, who had found additional data of the family included in the papers of his father-in-law. The important record appears to have been the one regarding the correct birth date of Guysbert's great-grandmother, Sarah Rapalje usually given as June 9, 1625, but said by Guysbert to have been June 7. In addition to the record of Sarah's birth, the papers also included the record of her marriage, number and names of her immediate descendants, with other particulars, and gave the name of Guysbert's grandfather as Guysbert Bogart (son of Teunis Guysbertsen Bogart, (#11). The writer is informed by the Historical Society that Mr. Vroom's letter is still in their files. Both the Genealogical Magazine of New Jersey, vol. 4, p. 9; and Dunlap's "History of New Netherland, Province of New York and State of New York", vol. 1, p. 47, refer to the letter.

Guysbert lived in Raritan, Hillsborough Twp., Somerset County, N. J., on the Raritan River, near the farm owned at one time by Peter D. Vroom, less than a mile east of South Branch.

At one time he owned a slave, Samuel Sutphen, who, at the advanced age of 87, made one of the longest, most full and clearest of all the statements made by Somerset County soldiers of the war of the Revolution. At the beginning of the war he was the slave of Bogart, on his farm on the Raritan. Casper Berger, of Readington, proposed to buy him from Bogart on condition of his doing militia duty in Berger's stead during the war. Samuel agreed to the terms, and was sold by Bogart for £98.10. (Somerset County Historical Quarterlies, vol. 3, pp. 185-187).

Guysbert made his will July 20, 1785 when 65 years of age. Died July 28, of the same year, and his will was proved Sept. 7, following an inventory made on Aug. 30, which showed a valuation of £1107.12.7 on his estate. His son-in-law, Peter D. Vroom and Benjamin Taylor were two of the three executors. His will provided that the three daughters of his son, John, deceased, were to receive, when they became of age, £600 which included the sum of £200 received by Guysbert from the executors of Johannes Albertse as a legacy to his first wife, Maria. His granddaughter Elizabeth who was the daughter of Guysbert's daughter, Maritje, was to receive the sum of £50. The balance of his real and personal estate was to be divided among his five daughters who have already been referred to. (Documents Relating to the Colonial, Revolutionary, and Post Revolutionary History of the State of New Jersey, First Series, vol. 35, half; Calendar of Wills, vol. 6, 1781-1785, page 49). Will recorded in Liber 27, at page 390.

Guysbert is buried in the Vroom burying ground on property which was a part of the Vroom farm, previously referred to , the gravestone inscription showing the date of his death as July 28 , 1785, age 65 years. (Somerset County Historical Quarterlies, vol. 3, p. 52). This sets the year of his birth as 1720.

One of Guysbert's daughters, Jennetje (Jane), was born Nov . 20, 1761 and died Oct. 2, 1839, according to the record of her gravestone in the Vroom burying ground. She was the wife of Willet Taylor.

Guysbert's daughter, Elsie, has been erroneously referred to in the Somerset County Historical Quarterlies, vol. 4, p. 75 as a daughter of Jacob Bogart. She was born Oct. 12, 1755, and died April 17, 1823. She married, June 1, 1775, Col. Peter D. Vroom, and had several daughters and three sons. The third son, Peter D. Vroom, Jr., was twice Governor of the State of New Jersey, minister to Prussia, and held other offices. He was a first cousin of GARRET CONRAD VAN WAGNEN, the subject of this volume, who was the son of Elsie's sister, SARAH BOGART. (Vroom family records in the Somerset County Historical Quarterlies, vol. 5, pp. 254-256 , and vol. 6, p. 216). The records quoted show that Guysbert's wife was ELIZABETH BODINE. Data of her probable ancestry is included as a part of the Bodine chapter.

Information of value concerning Guysbert's daughter , SARAH, and of her second husband, CONRAD VAN WAGNEN (#57 in the Van Wagenen Genealogy), is included in their respective applications for pensions, based on Conrad's service in the Revolutionary War. The records, on file in the National Archives in Washington, D. C. and reviewed for the writer by a member of the staff there in 1941 , during the period when records of the descendents of Conrad's son GARRET C. VAN WAGNEN (#94) were being compiled for the work titled "The Family of Garret Conrad Van Wagnen and his wife Mary Welton". The pension records include the original family register of Conrad, which was removed from the family Bible and made a part of the application. The register shows that SARAH was born Mar. 5 1759, the daughter of Guysbert Bogart, and that she was the widow of James Stryker at the time of her marriage to Conrad Van Wagnen. In the record she stated that she had married Stryker about the commencement of the war. (The marriage license was issued on Oct. 18, 1779, per entries on pages 50 and 363 of "Documents Relating to the Colonial History of the State of New Jersey", vol. 22, being Marriage Records, 1665-1800). She testified that she was a widow on or about July 18, 1784, and that she married Conrad Van Wagnen Sept. 6, 1786 in Boundbrook, N. J. Her three sons by her first marriage are named as John Stryker, Guysbert Bogart Stryker, and Jacobus Stryker, born on Aug. 12, 1780; January 20 , 1782; and May 12, 1784, respectively.

Any possibility that she could have been a daughter by her father's first marriage is precluded , not only by the fact that his will refers to only one child by his first marriage, but also

by the fact that Elsie, her sister, was the daughter of Elizabeth Bodine, and was born in 1755, four years prior to Sarah's birth, thus proving that Sara's mother was also Elizabeth Bodine.

The reader may be confused by what appears to be an error in the name of Sarah's first husband. Her father's will shows the name as Jacobus Stryker, whereas in her pension record, his name appears as James Stryker. It is a well known fact that it was a common practice among the Dutch to Latinize at least a part of one's name, in which case the name Jacobus appears in its English equivalent as James. (Anjou's "Ulster County, N. Y. Probate Records", vol. 1, p. 18; Munsell's "Annals of Albany, N. Y."; Riker, "Annals of Newtown, Queens County, N. Y., p. 266; Somerset County, N. J. Historical Quarterlies, vol. 1, p. 104; and Talcott, p. 480).

A further check on the identity of Sarah, is evidenced from her pension record which shows that she was a widow from 1784 to 1786, and from her father's will, made in 1785 which refers to her as then being a widow. Also it should be noted that her third and last son by her first marriage, was named Jacobus, in the same pension record in which her first husband is named as James.

Further search discloses that James (or Jacobus) was probably the Jacobus who was baptized Nov. 5, 1743, the son of Johannes and Cornelia Stryker. (Somerset County Historical Quarterlies, v. 8, p. 124).

A request was made of the Library of Congress for a review of the Stryker Family Genealogy in its files, in an effort to determine if any information of the marriage of Jacobus Stryker and Sarah Bogart might be included in that record. Altho reporting, in the reply to the inquiry, that there was a marriage listed for a James Stryker and Sarah Bogart, the data given was for members of a later generation.

The "Genealogical and Personal Memorial of Mercer County, N. J.", containing records of a region in no way connected with any of the family lines of this volume, has proved of much interest. Quite by chance, volume 2 of that work was examined, after most of the records of this chapter had been collected and arranged in semi-final form. A genealogical record of the wife of Mr. William Henry Tams, appearing on pages 666-669 of that volume, contains information which checks in every respect, the Bogart lineage of Sarah Bogart as already given, particularly the date of Sarah's birth, her marriage to Jacobus Stryker, and the date of birth of her son, Guysber Bogart Stryker, who married Amy Powers and of whose descendants considerable information is given in the Tams records. In commenting on the Stryker genealogy, the account adds that the genealogy states that Jacobus never married, but that this is a mistake as he married Sarah Bogart. The writer is of the opinion that the foregoing can be considered valuable corroborative evidence in support of his own findings and conclusions.

Sarah died Aug. 20, 1844, in Charlestown, N. Y., according to the pension record. Her residence, prior to the death of her husband, Conrad Van Wagnen , was in Sharon, N. Y., where they had settled after 1797.

Records of her descendants, and of the ancestry of Conrad , have been given in the 1942 family record, in addition to the Van Wagenen Genealogy of 1884. Additional details of the Van Wagenen line are included as an appendix to this volume.

CHAPTER IX

RAPALJE LINE

Identified with New Netherland, almost from the beginning of the Dutch colonization, the family has been the subject of several genealogical studies , the earliest published record appearing over a century ago. These studies vary in scope, but insofar as colonial records of the family are concerned, there are but a few cases, of a minor nature, in which the various records are not in agreement. It is with the pre-American, or European history of the family, however, that difficulty is encountered in establishing a connection between the family in America and those in Europe , of similar name.

Notes in manuscript, in the N. Y. Historical Society , which were prepared by a Judge Benson and to which reference is made by certain compilers, may have been the fore-runner of later printed works. Of these, Prime's "History of Long Island", 1845, pp. 357-363, contains, in part, the statement that JORIS JANSEN RAPALJE, the progenitor of the family in America, was one of three sons of Abraham Janssen (a Flemish painter). Prime was influenced without doubt, by certain so-called facts given him by General Jeremiah Johnson who claimed descent from one of the three sons , a claim which has since been disproved.

Holgate, in his "American Genealogy", 1848, follows the same trend as Prime, and going into more detail, gives, without proof, a lineage dating back to Gaspard Colet De Rapalje, born in 1505 . The male line of descent disappears, his daughter having one son, who in turn is indicated as having had three sons. (pp. 16 - 21). In a note on page 303 of volume 43 of the New York Genealogical and Biographical Record, Mr. Henry Wyckoff , without referring to any specific work, writes, "In the Rapalje line as usually given there appears to be a generation skipped and I have never seen any comment on the fact, altho I have seen it bridged in an extraordinary way by the insertion of the marriage of Briekje , daughter of Gaspard Colet De Rapalje to Victor Honorius Janssen". Both Mr. Wyckoff and the writer are at a loss to explain the setting up of a pedigree in the male line by the use of a subterfuge of inserting, for one generation, the name of a member of the distaff side of the line.

Soon after the publication of Holgate's work , James Riker , an authority on Long Island history and genealogy , published his work, "Annals of Newtown, N. Y." in 1852. Without giving proof he dates the Rapalje line back to the eleventh century in Brittany , France. On the other hand, however, he takes notice of Holgate's work, as well as those preceeding him , in regard to the supposed existence of three brothers, bearing the surname Janssen, pointing out that early records do not corroborate this but go very far to disprove it". He adds that Holgate's work contains very serious mistakes respecting the Johnson and Rapalje families , the three supposed brothers being credited with this mistaken relationship

solely because each bore the name Janssen , which, following the Dutch custom, merely meant "son of Jan", it not necessarily following that they were sons of the same Jan. (pp. 267-280). The writer fails to understand, also, why a son of Abraham Janssen , as Joris Jansen(Rapalje)-would have been so named. Had he been of Dutch parentage, it would seem more in keeping with the custom , to have named him Joris Abrahamsen. It is probably within reason to say that Joris Jansen Rapalje's father was named Jan or Jean .

T. G. Bergen, in his "Bergen Family", 1876 , while no doubt aware of the existence of the previously mentioned works,refrains from commenting on them , and is extremely reluctant to claim any noble lineage for the Rapalje's, even to the extent of expressing doubt as to the authenticity of the name "de Rapalje", as written on some occasions , his contention being that the name Rapalje is probably the correct full name, and not of noble origin as a prefix "de" might indicate. He is careful to avoid entirely , all claim of lineage as outlined by Holgate and others , insofar as such noble lines are concerned.

In 1881 Bergen published his "Register of the Early Settlers of Kings County, L. I.", and here again he refrained from stating that the family was of noble origin. (pp. 231-235).

Stoutenburgh's "Documentary History of the Dutch Congregation of Oyster Bay, L. I.", 1902,containing records of the family from its beginnings in America, and including records of some of the later generations, did not, however, include any reference to the European ancestry. (pp. 444-450).

Hamm's "Famous Families of New York", 1902, vol. 2, pp.63-70 duplicates Riker's work relative to the European lineage of the family, and Pellewrau's "Genealogical and Family History of New York", 1907, vol. 3, pp. 132-152, is similar to, and no doubt is a copy of, Holgate's work regarding the ancient lineage.

The writer's study of the Rapalje family was nearly complete when it was found that Frank Allaben, in his "Ancestry of Leander Howard Crall", 1908, had prepared a very thorough article in regard to the European lineage of the Rapalje's , similar in content to the one here presented, but in greater detail. Having clearly explained his opinions, he concedes only the probability that the father of Joris Jansen Rapalje was named Jean. (pp. 265-298; 390-400). Allaben, in commenting on the various ideas prevalent regarding the family, gives his opinion that many statements made by Holgate were perhaps derived from pure tradition or conjecture and need corroboration, adding that the account of the 3 brothers is simply a myth which had been accepted by Holgate and that it is "built on the sands of tradition instead of a solid foundation of documentary evidence". Altho he gives documentary records of certain individuals bearing the name, Allaben does not attempt to prove any connection between them and the family in America. A very comprehensive account of Antony Jansen Van Salee, assumed by several writers to have been the brother of Joris

Jansen Rapalje, is included in Charles A. Hoppin's, " Washington Ancestry", vol. 3, pp. 69-100 .

In 1918 appeared Eardeley's "Ancestry of Chauncey M. Depew", in which are quoted several of the works which have been the object of the writer's study. The European background, given on pp. 202-204, quotes Miller's "Almy Genealogy",- which the writer has not reviewed,- and in conjunction with the several other works , gives essentially the same lineage, with nothing new added. (Pages 201-205).

The year 1928 marked the first appearance of a difference in method of study of the possible family background. Writing in the Genealogical Magazine of New Jersey, vol. 4, pp. 1-10, Mr. Louis P. De Boer, LL.B., M. A., presents a brief study of the probable places of residence of the family, and lists several documentary records of persons bearing the Rapalje name,-however,-and this is significant,- Mr. De Boer makes no attempt to prove any relationship between Joris Jansen Rapalje and any of these individuals , resting his argument on the fact that ancient records still need further study in order to establish the connection necessary to link the family in America to those in Europe.

As late as 1937, the early un-documented lineage as given by Holgate, was still in use. Writing in the Utah Genealogical and Historical Magazine, vol. 28, Mr. James E. Gibson repeats , with further elaboration, the records which appeared in Holgate's volume of 1848, and adds that "though credited with being French , the family was originally Italian, with residence at Rapelia from which place they emigrated to France in the 15th. century". This certainly does not agree with those writers who state the family is traceable to the 11th. century as residents of France. Mr. Gibson's data appears on pp. 9-13 of the magazine.

With the exception of Prime, the preceeding works contain a record of the children of Joris Jansen Rapalje, and with the exception of the Bergen genealogy and Mr. De Boer's account , data of succeeding generations, in varying amounts, is also included but Riker's "Annals of Newtown" includes by far the greatest number of such records. Most of these works also include brief reference to the arrival and settlement of the family, as well as to some of the more important events connected therewith.

Daniel Van Pelt's "Leslie's History of the Greater New York", 1892, vol. 2, pp. 35-36, duplicates Prime's work relative to the supposed relationship of Antony Jansen Van Salee to Joris Jansen Rapalje.

The first of the family of whom we have definite records was JORIS JANSEN RAPALJE (also written Rapalye), born probably , about 1600. Among the writers who describe him as a proscribed Huguenot from La Rochelle, France, is Charles Kingsbury Miller in his "Historic Families of America", pp. 92, 93, 97, 100, whose work is quoted by Frank Allaben in his "Ancestry of Leander How-

and Crall", pp. 271-272.

Mr. Louis P. De Boer, writing in vol. 4 of the Genealogical Magazine of New Jersey, pp. 1-10, refers to the old city of Valenciennes as having been the ancient home of the "Rapallier" family. Lying a considerable distance north-east of Paris, it is located almost at the border between France and Belgium. Far to the south-west of Paris, on the Bay of Biscay, is located the city of La Rochelle, nearly 300 miles from Valenciennes. If it is true that the family was of Valenciennes origin, then they were known as Walloons and not Huguenots. French speaking, the Walloons were inhabitants of the Netherlands who suffered severe persecutions during the 16th. century. Mr. De Boer states that many of the descendants of the Walloons had settled at or near La Rochelle, and later removed to the industrial (mostly weaving) centers , in the Dutch Republic, prominent among these being the city of Leyden.

Mr. De Boer has found that members of the family were at the city of Leyden, at the time of Joris Jansen Rapalje's migration to New Netherland, but adds that "the records of that city have still to be searched more thoroughly". He adds that the immediate ancestors of the family were weavers, the industry having flourished for centuries in the South Netherlands.

Rapalje's wife was CATALYN TRICO, credited by Mr. De Boer as having been of the Tricault family, which was located chiefly in Douay, a neighboring city of Valenciennes. Immediate ancestors of the family are also credited with having been weavers, "the family name being permanently preserved in that of a certain woven stuff of which they were the inventors". (Tricot weave, a soft kind of ribbed cloth, used as dress material; or a woolen yarn fabric knitted by hand). Catalyn's father is said by some writers to have been Joris Trico. Mr. Gibson, in an article appearing in vol. 28 of the Utah Genealogical and Historical Magazine , states that she was the daughter of Jan Trico, a physician of Paris.

Documentary evidence exists which establishes without doubt, that she was born in 1605. The first of these documents is in the form of a "Journal", an account of a voyage to New York , made by two Labidists. The original manuscript is preserved in the Collections of the Long Island Historical Society, and a translation was printed in vol. 1 of the Memoirs of the Society. On May 30, 1680, the Labidists visited Catalyn, who had been a widow several years, and who was then living in Brooklyn. Described as being an old Walloon from Valenciennes, seventy-four years old , it was said of her that "she lived alone by herself, a little apart from the others, having her little garden and other conveniences, with which she helped herself".

The second document is in the form of a deposition made by her before Gov. Dongan on Feb. 14, 1685, in which her age is referred to as four score years. On Oct. 17, 1688, about a year before her death, she made another deposition , at the request of

the English government, in which her age is given as about 83 and the place of her birth as Paris. Earlier reference to her as having been from Valenciennes, does not rule out the possibility of her birth having occurred in Paris. In the former document, she stated she had come over in 1623 or 1624, and in the latter, she gave the year as 1623. (English MSS vol. 35, p. 182; Cal. vol. 2, p. 172; and O'Callaghan's "Documentary History of the State of New York", vol. 3, pp. 31, 32 in the 4to. edition, and pp. 49 ; 50-51 in the 8vo. edition).

In her first deposition, she includes the information that 4 other women came over on the same ship with her and were married on the ship. Had she, herself, not been married until after the ship sailed, she no doubt would have mentioned it ,- omission of such reference leads to the conclusion that she and Rapalje were married before leaving the Netherlands.

Catalyn's second deposition contains valuable historical information, including the statement that she and her husband were one of about 18 families who continued on to Albany, where they settled. The year of this settlement is now officially recognized as having been 1624. This contrasts with Catalyn's deposition, in which she gives the year as 1623, and may be explained, perhaps, by stating that the confusion often encountered as a result of a change from the "old style" of reckoning, to the "new style", may be the reason for this apparently inconsistent set of dates.

A certain amount of confusion also exists as to the name of the ship on which the Rapalje's took passage. Some sources state that the ship bore the name "New Netherland", others give "Unity" as the correct name. In the light of her testimony in both of her depositions, in which she declares the ship's name to have been "Unity", it seems reasonable to accept this as fact. Mr. Allaben, in his "Ancestry of Leander Howard Crall", adds that as a result of his searches, he is convinced that there were two ships, bearing the above names. He adds that the colonists were for some time residents of Leyden. His belief that there were two ships is also supported by data appearing in the Collections of the New York Genealogical and Biographical Society, vol. 1, introductory pages i-iii.

If there were two ships which made the voyage, it is probably reasonable to presume that each followed the same route to New Netherland. Reynolds, in his "Albany Chronicles", pp. 20, 21, describes the voyage of the "New Netherland", which, after leaving Amsterdam, reached the Canary Islands in April. It passed between the Bahamas and Bermuda Island, and arrived at Manhattan in May, and from there about 18 families continued up the Hudson River to settle at what was to become Albany. O'Callaghan, in his "History of New Netherland", vol. 1, page 101; Brooks, in his "Historical Records of Staten Island, page 12; Clute's "Annals of Staten Island", pp. 14-15; and Leng and Davis' "Staten Island and its People", vol. 1, pp. 88-89, credit the Rapalje family with first lo-

cating on Staten Island for a brief time , a remote possibility , but one of which there is no proof whatsoever. It seems probable, however, that had this been true, Catalyn would have mentioned it in her depositions.

Clute's work, just referred to, states that the colonists of this voyage came from the country bordering the river Scheldt and Flanders, that they professed the reformed religion, and had, two years before, applied to the Virginia Company (English) , for permission to settle in some part of Virginia. In spite of the fact that this permission was granted , there were so many conditions which would have affected their civil and religious liberty that they declined and turned their attentions to the New Netherlands, where so many arbitrary conditions were not insisted upon.

It is established from Catalyn's deposition of 1688, that in 1626 the family,(then three in number), moved to New York and after several years moved finally to Long Island. The removal from Albany, according to Mr. De Boer, was a result of an order issued by Peter Minuit, the new Governor of New Netherland, to all farmers in the province to concentrate on Manhattan. In the summer of 1626 there were 270 white inhabitants living at the lower end of the island. Here Rapalje opened the first public inn.

The Bergen genealogy of 1876, pp. 22-58 includes several of the more important records of the Rapalje family, and these, with some additional ones, are included in the account which follows . Reference is made in the majority of cases, to the original documentary sources from which the records were obtained. Additional volumes, of an historical nature, have been consulted , on the chance that still further data would be brought to light. Of this group, approximately fifteen were found to contain various information, which further studies revealed as having been adequately covered by Mr. Bergen. These volumes were in addition to the ones which have been discussed in the earlier part of this work.

Page 42 of vol.13 of the N. Y. Genealogical and Biographical Record, quoting page 84 of "Transactions of the American Institute of the City of New York", 1852. erroneously lists Rapalje as a farmer from Waael in the Netherlands who, with others, were the first men who began farming..... at the Wallabout (Brooklyn), in the year 1625. There is no evidence to support this, in fact, the testimony of his widow shows that he did not come to Manhattan until 1626, Further, it was not until June 16, 1637, that he purchased a tract of land from the Indians on Long Island. This land was called "Rinnegakonck", located in the vicinity of,and including the site of the Naval Hospital,and on the easterly side of the Wallabout, Brooklyn. Ft. Greene Park now occupies a portion of what was originally some of the woodland area of Rapalje's purchase. On June 17, 1643, this purchase was patented to him by the Governor, the patent showing an area of about 335 acres. (The records are a matter of documentary record, the 1637 record is in vol. G-G of land papers, at page 20; and the 1643 record is on page 64 of the same volume. They are calendered on pages 364 and

367, respectively, of O'Callaghan's "Calendar of Historical MSS in the Office of the Secretary of State, Albany, N. Y.", and are also referred to on page 4, vol. 14, of " Documents Relating to the Colonial History of the State of New York".

Several years later, on Mar. 18, 1662 , Rapalje and others , petitioned for a grant of woodland in the rear of Rapalje's property, and their request was granted. (Dutch MSS, v.10, p. 88; and Cal. vol. 1, p. 235).

On June 4, 1638, he entered into a contract with the Director-General, Wouter Van Twiller, by which the latter was to provide Rapalje with 2 milch cows on halves. (Dutch MSS v. 1, p. 11; Trans. v. 1, p. 14; and Cal. v. 1, p. 1).

He indebted himself to the church deacons for money borrowed from them, giving his note on June 20, 1640, for 60 guilders (about $24). (Dutch MSS v. 1, p. 207; Trans. v. 1, p. 293; and Cal. v. 1, p. 13).

Accused by the court for a violation of an ordinance governing the maize trade, a judgment in favor of the plaintiff , was given on Nov. 1, 1640. (Dutch MSS v.4, p. 79; and Cal. v.1, page 73).

Apparently unable to cope with the situation arising out of the murder of one of the colonists by the Indians, director Kieft requested that twelve men be elected, to form a board whose duty would be to suggest means of punishment for the commission of the crime. Representing Manhattan Island, Brooklyn, and Pavonia, (now Hudson County, N. J.), the board included Joris Rapalje. Designated "The Twelve Men", they took an oath, Aug. 29, 1641, at Fort Amsterdam, to keep secret their answers to three articles which Kieft had submitted to them , in which he requested advice as to the course to be followed in handling the matter. (Dutch MSS v.4, p. 104, 106; Cal. v.1, p. 77; Docs. v.1, pp. 414-416; and "History of the State of New York", by Columbia Univ. Press, 1933, page 277). The board was dissolved Feb. 18, 1642. (O'Callaghan's "Register of New Netherland", pp. 52-53).

Having petitioned, June 11, 1643 , for repossession of the land cultivated by Tymen Jense, Rapalje was ordered to "designate his land, when justice shall be done him". (Dutch MSS v.4, p.158; and Cal. v. 1, p. 85).

April 23, 1644, William Smith of Stamford , gave his receipt to Rapalje and Hans Hansen(Bergen), Rapalje's son-in-law for certain cattle hired by him. (Dutch MSS, v. 2, p. 108; Trans. v. 2 , p. 187; and Cal. v. 1, p. 27).

On Dec. 9, 1644, Rapalje signed a note in favor of Cornelis Maersen of Rens Glaerswyck, for 215 guilders ($86) for wheat sold to Rapalje. (Dutch MSS v.2, p. 136; and Cal. v.1, p.31). He must have defaulted on this note as an order was given later by Maer-

sen to sell the grain which was then in Rapalje's store. (Trans., v. 2, p. 194. Not listed in the "Calender"),

Rapalje had purchased a lot on the south side of the fort, and extending between the fort and the north side of Pearl St., on Manhattan Island. This was apparently the lot for which he received a patent on Mar. 18, 1647. (L. P. vol. G-G, p. 194; Cal. v. 1, p. 373). Seven years later,- on June 22, 1654,-the lot and a house which had been built on it, were sold to Hendrick Hendricksen for 800 guilders ($320). (Dutch MSS v. 3, p. 115; Cal. v. 1, p. 57; and Trans. v. 3, p. 326). The lot size is given on page 144 of Valentine's "History of the City of New York", as 100 feet deep and with a frontage on Pearl Street of 26 feet. It was located between Whitehall and State Streets.

One of Bergen's reasons for placing little emphasis on the possibility that the Rapalje family is of noble descent, is based on a will made June 12, 1647, by a sick master carpenter, who was in Rapalje's house at the time. In referring to him, the carpenter describes Rapalje as a chief boatswain, but gives no clue as to whether the reference is to a previous, or current, occupation.

Bergen is of the opinion that it is unlikely that a member of a titled family would have engaged in an occupation inconsistent with his noble birth. Is it possible on the other hand, that Rapalje may have lost title and fortune as a result of his belief in the Protestant religion, making it necessary that he become a part of the "Yeomanry" which Bergen refers to as having been that class of people from which came most of the early colonists? (The will referred to appears in vol. 2, p. 157 of the Dutch MSS; Cal. v. 1, p. 37; and Trans. v. 2, p. 349).

Several entries, relative to Rapalje and his wife Catalyn, have been found in "Records of New Amsterdam, 1653-1674". Edited by Berthold Fernow, and published under the authority of the city of New York, 1897, these records are the minutes of the Court of Schepens and Burgomasters. In order to group these records as one separate unit, the chronology of this work is therefore altered.

Mar. 16, 1648. Rapalje's name appears as a signer of a promise to live up to the rules regulating the operations of tapsters and tavern keepers. (Vol. 1, p. 8). Bergen cites this occupation as an unlikely one in which a member of a titled family would engage and takes the attitude that it further strengthens his contention that the family was not a titled one.

Aug. 11, 1653. Two creditors of Rapalje ask for payment of 228 guilders, 6 stivers for bill (about $91). His wife Catalyn, appearing in court, acknowledges receipt of the goods, and admits the money to be justly due. Ordered to pay in six weeks. (v. 1, p. 94).

Aug. 25, 1653. Paulus Schrick demands payment of 78 guilders 13 stivers according to account. (About $31). Rapalje admits the debt, but claims an adjustment as Schrick owes him rent. The case was continued on Sept. 1, at which time Rapalje's wife appeared for him, but it was ordered that he appear to defend himself. He did so on Sept. 8, at which time the case was submitted to two arbitrators. The final disposition of the case does not appear to be a matter of record. (vol. 1, pp. 105, 109, 113).

On the same date that Schrick instituted his suit, Adriaen Keyser also demanded payment of 67 guilders, 8 stivers, (about $27). Admitting the debt, Rapalje was given two months to pay. (Vol. 1, p. 106).

Sept. 8, 1653. Rapalje, this time in the role of plaintiff, demanded payment from Lodewyck Pos, of 357 guilders, according to a note dated June 30, 1651. Pos, in admitting the debt, claimed he had earned 25 to 30 guilders from Rapalje. He was ordered to pay the difference, (about $132) within three weeks. (vol. 1, page 114).

Aug. 16, 1655. Rapalje, the plaintiff in this action, was represented by his wife. A complaint was made against Jan Cornelis Clyn as a result of his having "arrested" Catalyn's money, in the amount of 160 guilders ($64), at Ft. Orange (Albany), without any reason and without resorting to any legal process therefor. Request was made that he either sue, or declare the "arrest" invalid. Clyn answered that he had no questions with the woman, but with her husband. His reasons for his actions were based on the fact that his negro had worked for Rapalje for 15 months and that Rapalje had not kept his promise to furnish certain articles of wearing apparel in addition to board and lodging. This was denied and the only admission made was that 4 guilders was owed to the defendant. Apparently satisfied with Catalyn's testimony, the court declared the "arrest" invalid, and "Georgie" (so named in the record) was ordered to pay the 4 guilders. (Vol. 1, pp. 338-339).

Oct. 18, 1655. Rapalje, plaintiff, requests court to condemn Hendrick Hendricksen to quit the house which had been leased to him and in regard to which there was a misunderstanding as to the conditions under which Hendricksen was to occupy the premises. No further records have been seen of this case. (Vol. 1, p. 377).

Aug. 28, 1656. This record establishes the fact that Rapalje had left New Amsterdam. A suit brought against him by Cornelia Schellinger, resulted in the court granting only a default, the record showing that Rapalje had departed beyond the jurisdiction of the court. (vol. 2, p. 157).

Nov. 15, 1661. Rapalje, as plaintiff, sued for a debt of 510 guilders, 4 stivers, (about $204). Symon Turck being named as the defendant in the action. Suit was instituted on the basis of the

signature of the deceased father-in-law of Turck, to a note for the amount specified, and also on the record as contained in the account book of Rapalje. Turck, as heir of his father-in-law, did not admit the debt, having had no knowledge of it. Continued on Nov. 20, questions as to the authenticity of the hand-writing on the note resulted in an order to compare it with the account book of Turck's father-in-law, in the hands of a notary. Continued on Dec. 6, Rapalje was ordered to prove by his own books that the debt was owed. On Dec. 13, Catalyn, appearing for Rapalje, offered as evidence, the account book in which was recorded the debt. Turck was ordered to pay, deducting what fairly belonged to him. (vol. 3, pp. 408, 411, 421, 424).

Oct. 28, 1662. Upon complaint of Juriaen Van Auweryck, relative to insults committed against him by Catalyntie Rapalje, an officer of the court was ordered to charge her to avoid such hereafter. (vol. 4, p. 153).

Any possibility that Rapalje may have lived in Brooklyn soon after his purchase of land there, seems to be precluded by testimony of his wife, Catalyn, in her deposition of 1688, in which it is stated that they moved in 1626 to New York and after several years, moved finally to Long Island. It is probable that they removed to their Brooklyn homestead soon after the sale of the real estate in Manhattan, in 1654.

Rapalje figured in the official life of Brooklyn, almost as soon as he settled, as he was a magistrate there in 1655, 1656, 1657 and 1660. (Docs. vol. 14, pp. 314, 344; and O'Callaghan's, "Register of New Netherland", pp. 73, 74).

As a protection against the Indians, an order was issued by the council, Feb. 12, 1660, prohibiting separate farms. On Mar. 1 Rapalje and others petitioned for permission to plant a village on the river side, opposite the Manhattans, in sight of Ft. Amsterdam and on a line between the towns of Brooklyn and Bushwick. Rapalje, however, on April 26, petitioned to be allowed to leave his house standing on his farm "for the present", but his request was not granted, the council ordering him to comply with the ordinance. (Dutch MSS v. 9, pp. 178, 522; Cal. v. 1, pp. 209, 221; and Docs. v. 14, p. 472). The proposed site of the village was probably at about the foot of South Fourth Street, Brooklyn.

Considerable delay, on the part of Rapalje and a few others, in complying with the ordinance, resulted in the issuance of another order dated, Feb. 10, 1661, directing them to proceed with their plans. (Dutch MSS v. 9, p. 523; Cal. v. 1, p. 221). Feb. 24, they asked that they be excused from the order, and offered, as an alternative, the suggestion that they be permitted to erect a blockhouse on land belonging to Rapalje, at a low point, instead of the high point originally planned. They were ordered to appear again on Mar. 3, 1661, for further hearing, and at that time, after they had presented their reasons, their petition was finally denied, and the order of the 10th. was re-affirmed. (Dutch MSS, v. 9, p. 530; Cal. v. 1, p. 221; and Docs. v. 14, pp. 494, 495).

On Dec. 25, 1662, Rapalje and his wife became members of the Protestant Dutch Church of Brooklyn, by certificate from Manhattan. (Holland Society Yearbook for 1897, p. 135). Stiles, in his "History of Brooklyn", vol. 1, p. 425, gives the date as 1660.

Bergen is of the opinion that Rapalje died soon after the close of the Dutch administration, which would set the time at about 1664 or 1665. The 1900 and 1920 yearbooks of the Holland Society of New York indicate 1665. The last record of his being alive is that in which his name appears as a witness at the baptism of his grandson, Frederick, son of Jan Joris Rapalje, in the Brooklyn church, April 30, 1662. (Dutch Church records in the H. S. Y. B. for 1897, p. 146).

Rapalje's signature was in the form of a mark resembling the letter "R".

Of Rapalje's wife, CATALYN TRICO, little further in the way of documentary records has been found. In 1642 she asked of Paulus Van der Beeck why he had struck her daughter. Upon his denying the accusation, she replied "you lie like a villain and a dog". He struck her in the presence of witnesses and called her vile names. For this she sued him for slander, Jan. 5, 1645. On January 12, he declared he could not prove his assertions and that he "knows nothing of the plaintiff but what is virtuous and good and as he struck her he will pay the fine of 2-1/2 guilders". ($1) . (Dutch MSS v. 2, p. 139; v. 4, pp. 214, 215; Cal. v. 1, pp. 31 , 93; and Trans. v. 2, p. 245).

Catalyn and her daughter Sarah made a declaration, Aug. 31 , 1642, regarding the conduct of Tryn Jonas, midwife, when sent for to attend Catalyn. (Dutch MSS, v. 2, p. 29; and Cal. v. 1, p.20).

On July 30, 1671, Catalyn, then a widow , was granted a patent for a lot in New York.

Catalyn died Sept. 11, 1689, according to the ancient family record. (Memoirs of the L. I. Historical Society, vol. 1,p. 342). She signed her name with a backhand letter "K".

Rapalje and his wife were the parents of eleven children, of whom seven were daughters and four were sons. Their births cover a period from 1625 to 1650. The dates of baptism of the last five children appear in vol. 2 of the "Collections of the N. Y. Genealogical and Biographical Society", at pp. 12, 15, 20, 24, 28. All baptisms in the New Amsterdam Dutch Church.

The records of births of their children are contained in the family register, now preserved in the library of the N. Y. Historical Society, New York City. Titled "Denamen & geslagt Register van der Kinderen van Joris Janse Rappelje", the first entry reads "1625 Den 9th Juny is Geborer De Eerste Dochter van Joris Janse Rappelje genaamt Sara". Peter D. Vroom in a letter written to the Historical Society, stated that his father-in-law, Gysbert Bogart

constantly maintained that Sarah was born June 7 and not June 9. Reference to the letter is made in Dunlap's "History of New York", vol. 1, pp. 46-47; and the Genealogical Magazine of New Jersey, vol. 4, p. 9. The writer sees no reason for not accepting as valid, the record in the original family register.

O'Callaghan, in his "History of New Netherland", vol. 1, p. 101, and Clute, in his "Annals of Staten Island", pp. 14-15 suggest June 6 as the correct date of birth.

SARAH RAPALJE, the oldest child was born June 9, 1625. Altho said by earlier historians to have been born on Long Island, this has been definitely disproved, the depositions of her mother establishing clearly that she was born at Ft. Orange (now Albany, N. Y). It is worthy of note, and all historical sources agree, that she was the first white female child born in New Netherland, then including not only the present State of New York, but also land now comprising the State of New Jersey as well as lands including a portion of Connecticut.

Sarah was twice married, first to HANS HANSEN BERGEN, whom she probably married in 1639 when she was 14 years of age, their first child having been born in July, 1640. By this marriage she had eight children, one of whom probably died young, as on April 4, 1656, the council minutes record her petition as "first born Christian daughter in New Netherland, widow of the late Hans Hansen, and burdened with seven children", for sole control of, and a patent to, a meadow adjoining the 200 morgens of land in the Wale-bocht which had been granted her. "This considering she is the first born Christian daughter here". She also asked to be exempted from taxes. She was granted the use of her share of the meadow, but was granted no exemption from taxes. (Dutch MSS v. 6, p. 353; Cal. v. 1, p. 164; Trans. v. 2, p. 61; and Docs. v. 14, pp. 346, 347). Although Sarah speaks of the 200 morgens as having been granted to her, it probably was originally the property of her deceased husband, Hans Hansen Bergen, and not, as some writers think, an outright grant from the authorities, or a gift from the Indians.

Sarah's children by her first marriage were equally divided, there having been four sons and four daughters. Further information is given in the Bergen chapter. See p. 92.

In spite of the fact that she termed herself a widow, at the time of her petition, yet she had already married the second time and was then the mother of her first child by that marriage, born in 1655. Her second marriage took place sometime between 1653 and the early part of 1655, her husband having been TEUNIS GUYSBERTSEN BOGART. From this marriage she had seven children, one son, and six daughters. Further information of Sarah's marriage to Bogart is included in the Bogart chapter.

It is of interest to note that from her marriage with Bogart she had a grandson GUYSBERT BOGART, and that from her marriage

with Bergen she had a granddaughter, MARYTJE BERGEN. These grandchildren married and became the parents of GYSBERT BOGART, grandfather of GARRET CONRAD VAN WAGNEN, the subject of this volume.

She united with the Reformed Dutch Church of Brooklyn, April 10, 1661, by certificate from the church on Manhattan. (HSYB for 1897, p. 134). Bergen sets the year of her death as 1685 , and it is obvious she died before Nov. 11, 1687, when Teunis Bogart, then a widower, married Geertje Jans, widow of Dirck Dey. (Collections of the New York Genealogical and Biographical Society, vol. 1, p. 63).

She signed her name with the mark "S".

CHAPTER X

VAN ARSDALE LINE

It has been stated by James Riker in his "Annals of Newtown, Queens County, N. Y.", 1852, at page 307, that the Van Arsdale family derives its origin from Jan Van Arsdale, a knight of Holland, who, in 1211, erected the castle Arsdale and from it took his name,-his armorial bearings constituting (in 1852) the public arms of the bailiwick of Arsdale. This statement, accepted as fact, was repeated in part, in the Somerset County (New Jersey), Historical Quarterlies, vol. 6 (1917), at page 43, and verbatim in the Nebraska and Midwest Genealogical Record, vol. 3, (1925), at page 172, and the Somerset County Historical Quarterlies, vol. 8 (1919) at page 98. No documentary evidence was offered in any case, to support these claims.

Riker, in a later publication titled "Evacuation Day, 1783", printed in 1863, has partially contradicted his earlier statement by claiming, on page 24, that the Holland family was descended from an ancient Helvetian (Swiss) family.

In 1932 appeared the three volume "Washington Ancestry and Records of the McClain, Johnson and Forty Other Colonial American Families", by Charles A. Hoppin, volume 3 including a critical study of the origin of the Van Arsdale family, which, supported by evidence and logical conclusions, appears to disprove the presumed Holland or Swiss origin.

Mr. Hoppin's studies, results of which appear on pp. 163-172 of volume 3, are based not only on his own investigations, but on expert opinions given him by Mr. A. J. F. Van Laer, celebrated archivist of the State of New York, and an outstanding authority on matters relating to the early Dutch families and records. Admitting the possibility that SYMON JANSEN VAN ARSDALEN, -the progenitor of the family in America,- may have sailed from Holland, and that his ancestors may have been Dutch, Danish or Swedish, Mr. Hoppin, quoting Mr. Van Laer, states that Riker apparently assumed that Arsdale was the same as Arkel in Holland, and that Simon Jansen Van Arsdalen was a descendant of the well known Jan Van Arkel, a medieval Dutch knight. It is added that there exists in Dutch history no knight known as Jan Van Arsdale, nor is there a bailiwick in Holland of the name Arsdale, Aursdaul, or Osdoll.

Mr. Hoppin is of the opinion that Simon came from Arsdale, a small locality on the island of Bornholm, Denmark, in the Baltic Sea, located about 25 miles southeast of the southernmost point of Sweden, 90 miles east of Zeeland and halfway between Holland and Russia. It appears doubtful that Simon used the name Van Arsdalen before he came to New Netherland.

In a record of the Pluckemin line of the Van Arsdale family, compiled by Mr. A. V. D. Honeyman, and published in the "Somerset County Historical Quarterlies", vol. 8, pp. 96-119, reference is

made on page 97 to an account of the family which is possessed in manuscript by various members of the family. Because of its interest, the account is given here in its entirety , and it should be noted that the name of the first American progenitor, (Simon's father), is not mentioned.

"The Van Arsdale who was the ancestor of that family in this country, arrived at New Netherlands from Holland at an early period in the ship 'Dynasty', empowered by the Government , or some Company, in Holland,to examine the country about New York to ascertain whether it was practicable to establish in this country a pottery for the manufacture of chinaware. After fulfilling the object of his mission and with his baggage on board the vessel awaiting the day to set sail for his native land , he received a letter from his father stating that a pestilence was then raging there, and that his wife and two children had departed this life. This sad news changed his design of returning to Holland , and he settled at Flatlands on Long Island. There he married a Miss Jansen. His only child, as far as ascertained, Simon Jansen Van Arsdalen, became a man of standing in his native town".

Here again we have a record, unsupported by documentary evidence, altho Mr. Honeyman, in referring to Mr. Ege's "Pioneers of Old Hopewell (New Jersey), states that the above facts have also been included by Mr. Ege, who says that "all the family records have been preserved for a period of two hundred and fifty years", but no clue is given as to who the custodian may be. Mr. Ege refers to Isaac Van Arsdalen as the father of Simon, evidently the source from which was obtained the information in vol. 6 of the Somerset County Historical Quarterlies, p. 43. This statement regarding the identity of Simon's father is wholly without proof , and is entirely inconsistent with the ancient method of providing a surname for children.

SIMON JANSEN VAN ARSDALEN was the earliest known ancestor of the family in America, and it is probable that the name of his father was JAN.

Riker has stated that Simon was born in 1629 , and contrary to the statement on page 173 of the "Nebraska and Midwest Genealogical Record", vol. 3, that it is impossible to verify the date of his birth or death, there is in existence a documentary record on which Riker, no doubt, based his information. That record, under date of Feb. 19, 1664, in which Symon Jansen, age 35 , of the village of Amersfoot, Long Island, appeared before a notary and gave testimony and made declarations in regard to certain actions of Capt. John Schot, an Englishman, clearly establishes that he was born either in 1628 or 1629. (Docs. v.2, p. 482). As a result of his testimony, which had been taken along with that of several others, a convention was held at Midwout on Feb. 27, 1664 , for the purpose of selecting a delegation to be sent to Holland to lay before the States-General and the West India Company , the distressed state of the country. Simon, however, was not a delegate to the convention. (O'Callaghan's "Register of New Netherland, 1626-1674", pp. 145-146).

The year of Simon Jansen's arrival in New Netherland can also be determined from documentary sources. During the period from Sept. 26-30, 1687, the inhabitants, then governed by the English, took the oath of allegiance to the English crown, and included in the record of those from Kings County is Simon Jansen Van Arsdalen, of Flatlands, for 34 years a resident. (O'Callaghan's "Documentary History of the State of New York", vol. 1, p. 661 in the 8vo. edition of 1849, and p. 431 of the 4to. edition of 1850) . This sets the year of his arrival as 1653 , a date which has been accepted as correct by those who have had occasion to include information of the Van Arsdale family as a part of their records .

He was appointed a magistrate of Amersfoot (Flatlands) , May 3, 1660; March 31, 1661; and March 23, 1662. (O'Callaghan's "Register of New Netherland, 1626-1674", p. 79; and Docs. v. 14, page 510). He was a delegate, July 6, 1663, to a convention held in New Amsterdam (New York City), to engage the several Dutch towns to keep up an armed force for public protection against the English. (Register of New Netherland, p. 143).

As a result of Mr. Hoppin's studies , it is possible to include in this chapter several references taken from the Flatlands town records, as well as from Flatbush and Gravesend ,-all located on Long Island-and from the deacon account books of the Flatlands Reformed Dutch Church.

He purchased, Mar. 27, 1665, from Jacob , Peter, and William Van Couwenhoven, heirs of Wolphert Gerritsen Van Couwenhoven , a parcel of land in the town of Amersfoot; on June 18, 1674 he purchased from Elbert Elbertz, lots #1, 8, 18, and on the same date he was in possession of lot # 6 in the "Great Meadow", and lot #7 in the meadows of Varckens Hook. Later, on Dec. 30, 1675 he purchased from Joris Jacobsen a piece of land on the flats of Amersfoot, consisting of 28 morgens (56 acres). On March 31, 1680, he, with Roelof Martensen Schenck and Coerte Stevensen (Van Voorhees) purchased from Ferdenandes Van Sieghelen, for 3825 guldens, a lot and house. (Flatlands Town Records, Deeds, Miscellaneous, 1661-1831, pp. 57, 13, 19, 115, 213).

On Mar. 23, 1686 he bought from Cornelis Willemsen Van Westervelt, lot numbers 30, 31, 32 of the 15 acre allotments located at Gravesend, which included the right of commonage on the beach, and on Coney Island. (Bergen's "Register of the Early Settlers of Kings County, L. I.", p. 388). He paid £140 for these lots, April 7, 1687, and sold them to his son, Cornelis Symonsen , May 10 , 1700. (Gravesend Town Records, Deeds, Leases, #5, 1672-1686, page 99; and Book 6, p. 253).

He was one of the eighteen "constables, magistrates and consistory" of the Towns of Amersfoot and Midwout who, on June 19 , 1665, resolved to content themselves with a reader in the church, and dispense with the services of the minister , and was one of the signers of the decree. (Flatbush Town Records, Court Minutes,

1664-1670, p. 39). On Dec. 30, 1675, he was a signer of a declaration, as one of the constables and overseers of Amersfoot. (Flatlands Town Records, p. 115).

He was one of four men chosen May 11, 1677, to settle a dispute concerning the boundary between Amersfoot and Flatbush. (See Flatlands Town Records, p. 253).

From the records it is established that he was a constable under English rule, from 1679-1680, overseer in 1686, and was the commissioner on town boundaries. His signature, as constable, is on a record dated Mar. 22, 1680. (Flatlands Town Records, p. 191).

He was a member of a four man commission May 19, 1684, chosen to divide the meadows between Midwout and Amersfoot. (Flatlands Town Records, p. 273).

That he occupied an important place in the community, is evidenced also from a record dated Feb. 24, 1686. Gov. Dongan had agreed to amend the patent which had been granted to Amersfoot in 1667, by Gov. Lovelace, and Simon Jansen Van Arsdalen and Lucas Stevensen, as overseers, instructed the two emissaries-who were to take the original patent to the Governor for the addition of the amendments - that if the new privileges could be bought for 3 or 4 pounds, they were to accept the new patent, otherwise, they were to bring back the original just as it was. (Flatlands Town Records, p. 275).

He is listed in the Deacon's account book, Sept. 2, 1686, as an elder of the church, and also on Oct. 22, 1693.

He was assessed for taxes March 2, 1699, this being the last record of him in the town records. (Flatlands Town Records, page 215).

A slip of paper pinned to a page dated Feb. 23, 1710 in the Deacon's account book, lists Simon Jansen as one of 20 donors of money to the church, presumably for the poor chest, his contribution having been 40 guilders, the largest sum paid by any one of the donors.

Altho the "Nebraska and Midwest Genealogical Record", previously quoted, states that the date of his death is not known, yet it has been given by Riker as 1710, evidently based on a record in the Deacon's account book dated Oct. 29, 1710, showing the receipt of 24 guilders ($9.60) from Cornelis Van Arsdalen, his son, for a grave and shroud for Simon. This was in the churchyard of the Flatlands church. He left no will, no inventories were taken, and no administrator appointed, leading to the belief that he had probably divided his property before his death. (Washington Ancestry, vol. 3, pp. 163-172).

He married, probably between 1658-1660 , PIETERJE CLAESSEN,- not the daughter of Claes Cornelissen Wyckoff (as stated by Bergen, in his "Register of the Early Settlers of Kings County, Long Island", p. 309, and in his "Bergen Family", 1876, p. 436; Riker's "Evacuation Day, 1783", p. 24; Nebraska and Midwest Genealogical Record, vol. 3, pp. 173, 182; and the Somerset County, N. J. Historical Quarterlies, vol. 8, p. 99), - but of Claes Cornelissen Van Schouw. Information of her ancestry is included in the Van Schouw chapter.

The approximate period in which he probably was married , is derived from the fact that his wife was baptized Oct. 28, 1640 , and that one of their children, Geertje, (of whom no record has been seen as to date of her baptism), was married Oct. 15, 1678 . (Collections of the New York Genealogical and Biographical Society, vol. 2, p. 11; and Flatbush Church records in the Holland Society Yearbook for 1898, p. 88).

Berger in his "Register of the Early Settlers of Kings County, L. I.", p. 309; and the Somerset County Historical Quarterly, vol. 8, pp. 100-101, list seven children for Simon and his wife, Pieterje Claessen, four daughters and possibly three sons , it being supposed that a Simon Simonsen was one of the three. Only one baptism is a matter of record, that of the daughter, Marytje, bp. April 7, 1678. (Flatbush Church Records in the 1898 Yearbook, of the Holland Society, p. 108).

One of the daughters was:
JANNETJE SIMONSE VAN ARSDALEN, born about 1670, (Somerset County Historical Quarterlies, vol. 8, p. 100), married first to John....., and second, April 16, 1689, GYSBERT TEUNISSEN BOGART. (Flatbush Church Records in the Holland Society Yearbook for 1898 at page 93). Records of their family, and of his ancestry, are in the Bogart chapter.

Additional data of the Van Arsdalen family - not applicable to the specific records of this chapter - has been noted, namely:

Annals of Newtown, Queens County, N. Y.-James Riker, p. 307.

Register of the Early Settlers of Kings County, L. I.- T. G. Bergen, pp. 308, 309.

Nebraska and Midwest Genealogical Record, v. 3, pp. 173-174; 179-184; 201-202.

Somerset County Historical Quarterlies (New Jersey), v. 6,p. 43; and v. 8, pp. 96-119).

Evacuation Day, 1783. - James Riker, p. 24.

CHAPTER XI

VAN SCHOUW LINE

Brief information of CLAES CORNELISSEN VAN SCHOUW -sometimes referred to as Claes Cornelissen Meutelaer (or Neutelaer), or as Claes Cornelissen-is included in Bergen's "Register of the Early Settlers of Kings County, L. I., pp. 204, 207, 361 ; and in the "Somerset County Historical Quarterlies (N. J.), vol. 2, pp. 188-189, 236; vol. 3, p. 35; vol. 6, p. 84; and vol. 8, pp. 50-51. In the article appearing in volume 8, Mr. Jacob Wyckoff states that Mr. William F. Wyckoff -the compiler of the Wyckoff family record which appeared in volumes 2 to 6 inclusive of the Quarterlies - had traced the ancestry of Van Schouw to 1390 in the male line, adding that by virtue of a marriage into the royal line, the ancestry in the collateral line carries back through the kings of Denmark to Rurik of Baltic Sweden of about A. D. 825, and through Harold II, Saxon King of England (slain at the battle of Hastings by a relative, William the Conqueror) to Erik of Sweden of about A. D. 800. The writer has seen no proof of this claim of descent from royal lineage, and it is included in this chapter with no claims made as to its authenticity.

Two choices are possible in determining the year of birth of Claes Cornelissen. The first is based on a declaration made by him and Marten Harbersen, May 5, 1640, in regard to Hendrick Pietersen and Maryn Adriaensen having been drunk when the former purchased and the latter sold, a certain plantation on Manhattan Island. In this record Claes gave his age as 35 years, indicating the year of his birth as 1605. (Dutch MSS v.1, p. 200; Cal. v. 1, p. 13). The second choice is based on an affidavit which he made, Feb. 19, 1664 - when a resident of Flatlands (in Brooklyn), then called New Amersfoot - in which he made declarations and gave his testimony in regard to certain actions of Capt. John Schot, an Englishman. In this record he gave his age as 67 years, indicating that he was born in 1597. (Docs. v.2, p. 482). In the opinion of Mr. Charles A. Hoppin, who has made a thorough study of Claes Cornelissen, the year 1605 is probably correct, rather than 1597, it being presumed that Claes' memory would have been more accurate when he was a younger man. The baptismal records of Zierick-Zee, Isle of Schouwen, Holland, are reported by Mr. Hoppin as recording no baptism of Claes Cornelissen in 1597. Evidently there was no record of baptism found for the intervening years, up to and including 1605, otherwise Mr. Hoppin would have mentioned it. His studies, incorporated on pp. 173-182 of vol. 3 of his three volume work "The [illegible]ington Ancestry and Records of the McClain, Johnson and Forty Other Colonial American Families", 1932, show that Van Schouw came from the Isle of Schouwen, off the coast of Zeeland, (in the estuary of the Eastern Scheldt River), in the Netherlands. From his analysis of various patents for lands on long Island, in which Claes Cornelissen is referred to either as Van Schouw or Meutelaer, Mr. Hoppin has established that both of the names referred to one and the same person. The name Meutelaer is a dialect word, with a number of meanings such as "grumbler", "mutterer", or "one who teases".

It is reasonable to presume that the name of Claes' father was Cornelis. Beyond this, there appears to be no other information of his ancestors, based on documentary evidence.

The earliest record of Claes Cornelissen is a court action, dated Aug. 26, 1638, in which he charged that his wife had been assaulted by Johannes Montagne, to which charge Montagne pleaded guilty, and in turn charged Claes Cornelissen with assault. (Dutch MSS, vol. 4, pp. 17-18; and Cal. vol. 1, p. 64).

In two actions, both dated Sept. 2, 1638, in New Amsterdam, Montagne again brought charges against Cornelissen who was fined 6 guilders ($2.40) for the poor, and costs; and Cornelissen, listed as a wheelwright, brought an action against Cornelis Lambertsen Cool for delivery of a horse, judgment being returned in favor of the plaintiff, provided he give security for the payment. (Dutch MSS vol. 4, p. 18; and Cal. vol. 1, p. 64).

He probably lived in New Amsterdam for a number of years and on Nov. 14, 1642 he obtained a land patent for 16 morgens, 165 rods (about 32 acres) of land on Long Island, opposite Manhattan and between the Ferry and the property of Andries Hudde. (L. P. v. G-G, p. 54; Cal. v. 1, p. 366; and O'Callaghan's "History of New Netherland", v.2, p. 582). Stiles, in his "History of the City of Brooklyn", vol. 1, pp. 73-75, locates the property as fronting on the East River, for a distance of about 1276 feet south of the present Fulton Street, and Maude Wilder Goodwin, in her "Historic New York", vol. 2, p. 390, as well as Mr. Hoppin, describe it as being on land now known as Brooklyn Heights, facing westward toward the battery in New York, embracing in its eastern part, the site of the present Borough Hall of Brooklyn, the civic center of that borough and of the County of Kings.

He appears to have sold this property after which he resided in Flatlands, altho the writer has seen no record of sale. (See Somerset County Historical Quarterlies, vol. 2, pp. 189).

On May 14, 1646, a patent was granted to Capt. John Underhill, for Meutelaer's Island, in the East River, containing about 50 morgens, besides the meadows, and separated from Long Island by two "kills", with valley. (L. P. v. G-G, p. 146; Cal. v. 1, p. 371; and Docs. v.14, p. 66). It is quite probable that the island was occupied, and perhaps owned, by Claes Meutelaer, sometime before this date, but no records have been seen which would establish such a fact. Mr. Hoppin states that the island was in the East River, off Flushing, and that it has been erroneously described by various writers as having been the one in Jamaica Bay since called Bergen's Island. It is entirely possible, however, that the island in the bay may have also been known as Meutelaer Island, as it is reasonably certain that Claes Cornelissen lived there in his later years. Miss Rosalie Fellows Bailey, in her "Pre-Revolutionary Dutch Houses and Families in Northern New Jer-

sey and Southern New York", pp. 75, 77; and Bergen in his "Register of the Early Settlers of Kings County, L. I.", p. 204, as well as in his "Bergen Family", 1876, p. 255, have confused these two islands.

A few entries, relating to Claes Cornelissen, have been seen in Fernow's "Records of New Amsterdam", vol. 1. The first, dated July 14, 1653, is a request by Pieter Cornelissen Van der Veen, that an attachment against certain tobacco in the hands of Adriaen Dircksen Coen, belonging to Claes Meutelaer, on behalf of G. Loockermans by virtue of a note of many years standing, be declared valid. The request was granted, provided the debtor was summoned for the next court session. However, on Sept. 8, 1653, the attachment of Loockermans was annulled. (Vol. 1, pp. 88,115).

On Sept. 1, 1653, Loockermans sued Claes Meutelaer for payment of 123 guilders, 14 stivers (about $41.50), according to account. In admitting the debt, Claes claimed credit for 48 guilders ($19.20) for four trips with his wagon at the instance of the said Loockermans and Jacob Van Couwenhoven. Loockermans denied having ordered the wagon, and stated that he had been in it only once for which he promised to pay his share. Claes was ordered to pay the full amount, saving the action for the wagon freight, "whereof party must bring proof". An action listed as Loockermans v/s Claes Meutelaer is recorded under date of Sept. 8, but the writer is of the opinion that the translated record has been incorrectly printed, and that it should read Meutelaer v/s Loockermans, for the payment of the 48 guilders for wagon freight. Jacob Van Couwenhoven acknowledged having spoken for the wagon, and that he paid Meutelaer, together with other debts, 92 guilders, and 14 stivers ($37.08). Loockermans was therefore acquitted, and Van Couwenhoven was ordered to render account to Meutelaer, and proof of the aforesaid payment. (Vol. 1, pp. 111, 115).

A record dated Sept. 30, 1660, shows that Claes Notelaer was in debt to the church at Midwout (Flatbush), as evidenced by his note for 119 guilders ($47.60). In commenting on this, Mr. A. J. F. Van Laer, an outstanding authority on Dutch records, refers to an entry Mar. 13, 1675 in the Flatbush Deacons book of a receipt to Klaes Kornelissen for 100 guilders, and a later one for 15, and expresses his opinion that those receipts were for settlement of the note just referred to, the two names applying to one and the same person. (Docs. v. 14, p. 483).

Claes Cornelissen resided on Bergen's Island in 1671 according to an entry in the vendue book of Adriaen Hegeman, this fact being noted by Mr. Bergen in his "Bergen Family", p. 255, and in his "Register of the Early Settlers of Kings County, L. I., page 207. Miss Bailey, previously mentioned, in referring to Bergen's Island, gives its location as having been in western Jamaica Bay, north of Mill Island and adds that its center was at about (East) 72nd. Street, south of Island Avenue. The area has been filled in and has therefore lost its identity.

Claes Cornelissen is said to have been living as late as the year 1674 and died before 1680. (Somerset County (N. J.) Historical Quarterlies vol. 2, pp. 189; 236).

Bergen in his "Early Settlers of Kings County, L. I." , page 207, and in his "Bergen Family" page 255; and Miss Bailey, in her work previously referred to, indicate that Claes Cornelissen's wife was Geertjen Nanninex, evidently basing their conclusions on a record dated Jan. 27, 1643 , in which "Geertjen Nenninex , wife of Claes Neutelaer", made a deposition regarding some corn hills in Brooklyn. (Dutch MSS v. 4, p. 158; and Cal. v. 1, p. 84). This documentary evidence to the contrary, Mr. Hoppin's studies reveal that at the time Geertjen was supposed to have been the wife of Claes Cornelissen, she was already married to Abel Reddenhausen , her second husband. She was subsequently married two more times . Submitting these apparently contradictory facts to Mr. Van Laer , Mr. Hoppin was informed that the full intent of the 1643 record had not been written down, it being concluded that certain supplementary words had been omitted between Geertjen's last name and the next word "wife". There is certainly no reason to believe Geertjen was a bigamist, and further analysis by Mr. Hoppin reveals that it would have been impossible for her to have been the mother of Claes' children, on the dates which are a matter of record. She is undoubtedly the Geertje Nannix who is referred to in the Van Rensselaer-Bowier Manuscripts, pp. 829, 838, as having come to New Netherland in 1641, as a widow with her two children, at least three years after Claes Cornelissen came, and one year after his first child was born (1640). Versteeg's "New Netherland Register", vol. 1, p. 40, has also incorporated this error as a part of the records which he includes on pp. 39-41, regarding the family of Reddenhausen.

Claes Cornelissen's children, five in number , were all baptized in New Amsterdam. In no case is the name of the mother given, and in only one entry is his name given as Claes Neutelaer , the other four entries showing Claes Cornelissen.

The records of baptisms in the Protestant Dutch Reformed Church, copies of which are included in volume 2 of the New York Genealogical and Biographical Society's "Collections", show these entries:-

Page 11.....PIETERJE, bp. Oct. 28, 1640.
Page 16 .....Cornelis, bp. Oct. 4, 1643.
Page 21 .....Floris , bp. Jan. 20, 1647.
Page 25.... ..Gerbrant, bp. April 4, 1649.
Page 30... ...Arisen , bp. Nov. 5, 1651.

Mr. Hoppin in his work previously referred to, has erred in his tabulation of the children of Claes Cornelissen, appearing on page 175. While stating on that page, as well as page 173, that there were five children, he records only the first four, and has incorrectly shown as witnesses for the fourth baptism, those who

were witnesses at the baptism of the fifth child , whom he does not list. Aeltje Cornelis, the only witness at the baptism of the fourth child, is not named at all in Mr. Hoppin's listing.

According to Mr. Hoppin, the last two used neither Meutelaer nor Van Schouw as a surname, both retaining Claesen as their family name. They settled in Hudson County, New Jersey.

PETERJE CLAESEN married about 1658-1660 (according to Mr. Hoppin), SIMON JANSEN VAN ARSDALEN. Records of their family , and of his ancestry, are included in the Van Arsdalen chapter.

Records appearing in the Somerset County Historical Quarterlies, mentioned earlier in this chapter, referred to Claes Cornelissen as the ancestor of the Wyckoff family , and Mr. J. Wyckoff, writing in volume 8, p. 50, states that Claes' wife's name was Margaret VanderGoos. Mr. Hoppin, as a result of a very careful study and analysis of all the known facts, shows quite conclusively that Claes Cornelissen Van Schouw was not the ancestor of the Wyckoff family, and that the name of his wife is unknown .

It was specifically stipulated by Mr. Edward Lee McClain who sponsored Mr. Hoppin's work, that the exact original sources of all evidence gathered, were to be stated fully and that all matters of pedigree and history were to be openly and reasonably established to the utmost possibility of proof , no claims to be made which were unjustified by the evidence and the logical results of the investigation. Mr. Hoppin certifies to the correctness of his work.

CHAPTER XII

BERGEN LINE

The genealogy of this family, which was published in 1866, was corrected and revised by the compiler, Mr. Tounis G. Bergen, who then re-published it in 1876. His work was the foundation for a chapter in Frank Allaben's "Ancestry of Leander Howard Crall", (1908), at pp. 253-262; 388-399, which was, with the exception of some of the records on pp. 254-255, a copy of Bergen's work. The "Genealogical and Memorial History of the State of New Jersey", by Francis Bazley Lee, vol. 3, pp. 1017-1020; and Cuyler Reynolds', "Genealogical and Family History of Southern New York and Hudson River Valley", vol. 3, pp. 648-652, have certain family records beyond those appearing in the genealogy, as well as earlier records which are evidently based on the genealogy itself. Several other volumes, containing information of the family, have also been noted, none of them, however, including any records which are not in the genealogy. A detailed study was made of the several volumes of documentary records which were available locally, prior to an analysis of Mr. Bergen's work, and it is evident that the genealogy probably includes all the existing records of importance.

Those portions of the genealogy which are applicable to this chapter, have been re-arranged, minor records have been omitted, and the balance re-written in order to present briefly, the main points of interest contained in the various important records.

The numbers assigned to the various individuals are identical with those in the genealogy.

1. HANS HANSEN BERGEN, the ancestor of the family of Long Island, and New Jersey and vicinity, was a native of Bergen, Norway, a ship carpenter by trade. It is presumed that he first removed to Holland, from whence he emigrated in 1633 to New Amsterdam (New York City), probably arriving in April of that year with Wouter Van Twiller, the second Director-General of the Dutch West India Company. The year of his arrival is probably derived from a court record dated May 26, 1648, at New Amsterdam, in which he is charged by the fiscal (Attorney-General) with having aided in the smuggling of two metal chambers (cannons), which charge was dismissed, considering that he had been, for 14 years, a respectable resident, and on condition that he beg pardon of God and of the court. This would indicate 1634 as the year of his arrival, altho it does not entirely preclude the possibility of 1633 being the correct date. (Dutch MSS v. 7 p. 386; Cal. v. 1, p. 117).

His name appears in the records as Hans Hansen van Bergen en Noorwegan, Hans Hansen Noorman (Northman), Hans Hansen, etc. All records of him are signed with his mark, a capital letter "H". Of his parents we know nothing, but it is reasonable to presume that his father's name was HANS.

The earliest record of him is in the form of an agreement between him and Andries Hudde, dated July 9, 1638, and signed the next day at Ft. Amsterdam. It involved his hiring out on shares, to Hudde, in the capacity of overseer of Hudde's tobacco plantation on Manhattan Island, it being provided in the agreement that he was to be furnished with 6 or 8 persons with the necessary implements, etc., to carry on the work. Both were to share all the expenses involved, and Hudde was to pay Hansen "for his industry" a just amount. (Dutch MSS v. 1, p. 19; Cal. v. 1, p. 2; Trans. v. 1, p. 22; and Docs. v. 14, p. 11).

James Riker, in his "Harlem, its Origin and Early Annals", pp. 143-144, gives further information regarding the agreement. Andries Hudde had married in 1638, the widow of Hendrick de Forest who had died in July 1637. Preparing to visit Holland with his bride, Hudde engaged in the contract with Hansen, whom Riker describes as having borne a reputable character in the 11 years of his residence. This would, if correct, set the year of his arrival in America at 1627.

The plantation was located on the north-east side of Manhattan Island, and contained 100 morgens (200 acres), Hudde having obtained a patent for it on July 20, 1638, ten days after the two parties had signed their agreement. Hansen may have had some previous experience in the cultivation of tobacco, as a deed dated Feb. 19, 1639, from Claesen Swits to Maryn Adriaensen, describes the house and plantation as "heretofore in the occupation of Master Fiscox and Hans Hanson (Bergen), situated on the North (Hudson)River." (Dutch MSS v. 1, p. 73; Cal. v. 1, p. 5; and Trans. v. 1, p. 82).

On July 18, 1638, shortly after he made his agreement with Hudde, he gave his power of attorney to Wouter Van Twiller, to collect such money as was due him from Isbrant Adriaensen or his heirs (Dutch MSS v. 1, p. 23; Cal. v. 1, p. 2; and Trans. v. 1, p. 2[illegible]).

Hansen apparently left the employ of Hudde, sometime prior to Aug. 8, 1640, and removed to Long Island, as on that date certain lands there were patented to Abraham Rycken, the property being described as bounded in part by Hans Hansen (Bergen). Likewise, another deed dated July 29, 1641, involving the sale of the plantation of Cornelis Jacobsen Stille to Lambert Huybertsen Kol, refers to the property as being next to Hans Hansen on Long Island. (Dutch MSS v. 1, p. 251; Cal. v. 1, p. 16; and Trans. v. 1 p. 288). On Mar. 23, 1642, a patent embracing nearly the whole of Newtown, L. I., described the land as bounded by the meadows of Hans Hansen. It appears quite evident that he was in possession of property on Long Island, despite the fact that there has been no record found which would show that he had owned it at these early dates. It was probably acquired from the Indian owners between 1638 when he first worked for Hudde on Manhattan, and 1639, when the land he owned on Manhattan passed from the possession of Claes Swits to whom he had probably sold it.

The property on Long Island was probably the same lands for which he obtained a patent March 30, 1647, from Gov. Kieft. The deed was for land at Bushwick, L. I., containing 200 morgens (400 acres). (L. P. v. 1, p. 2; Calendar of Land Papers in the Office of the Secretary of State of New York, 1634-1803, p. 3; L. P. v. G-G, p. 205; Cal. v.1, p. 374; Docs. v.14, p. 68; and O'Callaghan "History of New Netherland", v. 2, p. 585. Including considerable frontage on Wallabout Bay , the limits of the patent are further described in Stiles' "History of the City of Brooklyn", v. 1, pp. 88-89, as extending from Rennegaconck Creek (the present Kent Avenue Basin) to the present Division Avenue, formerly the boundary between Williamsburgh and the City of Brooklyn; along Division to near its intersection with (south) 10th. St., thence southeasterly probably as far as.....the neighborhood of Vandervoort Avenue and Montrose St. It was therefore partly in Williamsburgh (formerly Bushwick) and partly in Brooklyn , and included the settlement then known as the Bushwick crossroads , and the meadows adjoining Newtown.

At least three records have been seen, which establish without doubt, that Hansen was a ship carpenter. The first record is probably the one dated July 11, 1642 in which it is declared that he had made an agreement early in the year to make a yawl for Mr. Moyr. (Trans. v. 2, p. 45). The second record appears under date of Nov. 7, 1645, court proceedings, at which time he brought suit against Lambert Clomp for payment for "half a sloop". Clomp declared he had bought the sloop on condition that it be made tight and seaworthy. Judgment was for the plaintiff, Hans Hansen, on a condition, however, that he prove the sloop was seaworthy when he sold it. On Feb. 8, 1646, he sued again, at which time the case was referred to two arbitrators , one of whom was Frederick Lubbertsen , whose daughter, Elsje Fredericksen, married Hansen's son Jacob Hansen (Bergen). (Dutch MSS v.4, pp. 239, 246; and Cal. v.1 pp. 98, 99). A third record is in the form of a power of attorney given by Harman Bastiansen of Fort Orange (Albany) , to Isaac de Forrest to collect a debt of 125 guilders ($50) owed by Hans Hansen, ship carpenter residing on Long Island. (Dutch MSS v.3, page 59; Cal. v. 1, p. 40; and Trans. v. 3, p. 157). Record is dated Aug. 19, 1649.

On Feb. 27, 1643, he was one of five signers of a petition , asking permission for the inhabitants of Long Island to "ruin and conquer" the Ma reckkawick (Brooklyn) Indians , to the end that the "much wishe for peace of this place may be and remain, permanent". Altho y were refused permission to do so , it was provide that in c e of the Indians evincing a hostile disposition, then every man s do his best to defend himself. (Docs. v. 1, pp. 416-417). I iberately going against the orders which had been given, a n expedition was organized against the Indians but it is not known whether or not Hansen was a member. As a result of this outbreak, the inhabitants were forced to flee to the security of New Amsterdam , on Manhattan Island. All the settle-

ments of Long Island having been devastated, a meeting was called in October, 1643, by Gov. Kieft, to consider various propositions which were to be submitted to them for the common good, and Hansen was one of the signers of the resolutions adopted at the meeting. (Docs. v. 1, pp. 191-192).

There is a tradition in the Bergen family that Hansen, while cultivating his plantation, was chased by the Indians. Seeking a refuge in a tree, he was discovered, and believing his end to be near, he commenced singing in a melodious voice, with which he was blessed, the hymn which commences with, "In nigh grootste nood o Heere". (In my greatest need, O Lord). His singing was so charming to his pursuers, that after listening for some time, in delight, they left him unmolested and free to go on his way, rejoicing.

He and his father-in-law, Joris Rapalje, hired cattle to Wm. Smith of Stamford, for which the latter gave his receipt, April 23, 1644, it being agreed that the cattle were to be returned by the next year at the same time, and the increase divided half and half. (Dutch MSS v.2, p. 108; Cal. v.1, p. 27; and Trans. v.2, p. 187).

He purchased wheat from Cornelis Maerson of Rensselaerswyck, for which he gave his note for 250 guilders ($100), Dec. 9, 1644. (Dutch MSS v.2, p. 136; Cal. v.1, p. 31; and Trans.v.2, p. 235).

He owned a lot on the north side of the present Pearl Street in New Amsterdam, adjoining Fort Amsterdam at the southeast corner,- now between Whitehall and State Streets,-of about 15 feet on Pearl St., and with a depth of about 115 feet, for which he received a patent March 13, 1647. (L. P. v. G-2, p. 184; Cal. v. 1, p. 373; and O'Callaghan's "History of New Netherland", vol. 2, p. 585). This lot was sold May 30, 1654, by Sarah Rapalje, whom he had married about 1639, and who was a widow at the time of sale. The writer has not seen the record of this transaction.

Hansen was the defendant in a suit brought against him by Jacobus Vis, July 21, 1653, in Burgomasters and Schepens Court, in New Amsterdam, a default being entered for both parties. (Records of New Amsterdam, by Berthold Fernow, vol. 1, p. 89). Bergen in the genealogy, refers to the above date as the last record of Hansen being alive, but this is an error, as on October 12, 1653, Hansen was a witness at the baptism of Pieter, son of Pieter Pietersen (Van Nest) and Judith Rapalje, a date which Bergen himself records in the genealogy. (Collections of the New York Genealogical and Biographical Society, v.2, p. 35). Hansen died between then and the end of 1654, as evidenced by the preceeding paragraph. It is probable that his widow continued living on his Long Island property.

Hansen's wife, Sarah Rapalje, was a daughter of Joris Rapalje and Catalyn Trico, and was their first child. Details of her ancestry are included in the Rapalje chapter.

Hans Hansen Bergen and Sarah Rapalje are said to have been the parents of four sons and four daughters. all baptized in the Protestant Reformed Dutch Church in New Amsterdam (New York City) T. G. Bergen lists the last two children as twins , JACOB HANSEN. BERGEN,(#8) bp. Sept. 21, 1653, and Catalyn Hansen, bp. Nov. 30 , 1653. (Collections of the New York Genealogical and Biographical Society, vol. 2, pp. 35 and 36). In spite of the fact that it has been accepted by those who have had occasion to list these children, that they were eight in number, this writer is of the opinion that there were only seven. While it is true that the baptismal records give the father's name as Hansen, yet it is difficult to explain why the last two children, supposed twins, were not baptized at the same time. Stoutenburgh, in his "Documentary History of the Dutch Congregation of Oyster Bay, L. I.", which was published 26 years after the Bergen genealogy, refers to Catalyn Hansen, bp. Nov. 30, 1653, as the daughter of Hans Jansen, adding that she was the wife of Lucas Stevensen Van Voorhees. (pp. 386-387). The present writer believes that the name of Jansen was incorrectly written in the baptismal records as Hansen. The name of the mother does not appear in that record. It is worth noting, also, that there were only seven children living on April 4, 1656 when Sarah, then the wife of Teunis Guysbertsen Bogart, set forth in a petition that she was burdened with seven children, indicating that had there been eight children, originally , then one of them (Catalyn) had died prior to that date. The petition is described in the Rapalje chapter.

A note signed in April, 1651, by Hansen, was the basis for a suit instituted Feb. 21, 1656, and tried on the 28th., in Burgomasters and Schepens Court in New Amsterdam , by Paulus Schrick , against Sarah, widow of Hansen, for the payment of a note for 84 guilders, 5 stivers ($33.70). Stating that she knew nothing of the debt, she asked for, and received, a delay of payment , until the next harvest. (Records of New Amsterdam, by Berthold Fernow , v. 2, pp. 37, 47).

There is no record of any of Hansen's 400 acres of land on Long Island ever reverting to any of his children. After the conquest of New Netherland by the English in 1664, it was required that the inhabitants take out new patents. Sarah's second husband, Teunis Guysbertsen Bogart , taking advantage of this, took out a new patent April 5, 1667 , for this property , in his own name, instead of in the names of Hansen's children , who were entitled to it and there is no record, apparently, showing that a settlement was made with the children , as compensation for their patrimonial estate. It is possible, however, that compensation was given, or that debt of 778 guilders ($311.20), owed by Hansen to the Dutch West India Company , which Bogart paid to the English government Oct. 13, 1671 , was considered by him to have been a satisfactory method of balancing what he should have paid to the children for Hansen's lands. In paying the debt , the widow and heirs of Hansen were relieved from all further claims against them by the company. (English MSS v. 22, p. 120; and Cal. v. 2, p. 6).

No record has been seen which would indicate why Hansen was indebted to the Company. However, in order to encourage the emigration of settlers to New Netherland, the Company in 1639, gave not only free passage to farmers, but also promised to furnish them for six years with a farm, dwelling house, barn, laborers, and farm animals and implements, for which they were to pay a yearly rent of 100 guilders ($40), and 50 pounds of butter. On the expiration of the lease, the tenant was to return the same number of cattle he had received on taking possession, and it is possible that Hansen may not have returned these cattle.

One of Hansen's sons was:-

8. JACOB HANSEN BERGEN, bp. Sept. 21, 1653 in New Amsterdam. (Collections of the New York Genealogical and Biographical Society, v. 2, p. 35). He was the seventh child and the fourth son of Hans Hansen. For records of him, the writer is dependent almost entirely on the Bergen genealogy (1876), as most of the information has been taken from Kings County records which are not available locally.

He married, July 8, 1677, in Brooklyn, ELSJE FREDERICKSEN van der Kreest, daughter of Frederick Lubbertsen. (Holland Society Yearbook for 1897, pp. 141-142). Information of Elsje's parentage is included in the Lubbertsen chapter.

Jacob and his wife, of the village of Brookland, were members of the Reformed Dutch Church there on Nov. 19, 1679, and in 1682 he was a deacon of the church. He was assessed in 1683, for livestock and 24 morgens (48 acres) of land and valley, with a total valuation of £115. 10s., and in 1686 his name appeared on the inventory of debtors of the estate of Cornelis Steenwyck, of New York, per liber 19 B., p. 206, New York Surrogate's office. He was a resident of the "Wallabout".

He took the oath of allegiance to the British government, in 1687, and in 1698 was chosen constable of Brookland. In the same year the census lists his family as consisting of one man, one woman, six children and two slaves. He was a petit juryman, in court of common pleas April, 1689, and from 1700 to 1708, inclusive he was elected or appointed one of the trustees of the common lands and to defend the town rights of Brookland. He was assessed for 150 acres of arable land in 1706. On April 23, 1708, his name appears with others on an agreement to call a minister to the Brooklyn church. He was sued for trespass Nov. 11, 1714, by Cornelis Sebring, and in October 1718 also. He sued Sebring for £19 in October 1722 and again in 1723. Sebring was the brother-in-law of Jacob's wife, Elsje. Jacob was a member of the board of supervisors of Brooklyn in 1715.

By a quitclaim deed executed April 7, 1726 by his wife's sister, Jacob and his wife came into possession of two tracts of land of 140 acres and 10 acres, which had been a part of the land of Frederick Lubbertsen, father of Elsje. On April 13, 1732, 200

acres in Brookland were sold to Jacob's son, Hans Bergen, for the sum of £1350. Also included in the sale were 10 acres of meadow, and two lots of woodland of ten acres each (Liber B. p. 160 of Conveyances, Kings County Register's office).

His name appears on the Brooklyn census of 1738 which is the last record of his being alive. (Stiles' "History of Brooklyn", vol. 1, p. 439).

Jacob Hansen Bergen and his wife Elsje, were the parents of nine children, three sons and six daughters, the sixth child and third daughter having been:-

35. MARRETJE BERGEN. Her baptism is evidently not a matter of record, althe it has been indicated as 1695. The Bergen genealogy gives the date of her marriage to GYSBERT BOGART, Jr., as Nov. 17, 1719. Flatbush Church records, appearing in the Holland Society Yearbook for 1898, at page 99, do not indicate the month. Gysbert died in 1768. He owned and occupied a part of the homestead farm and was at one time a schepen of Bushwick. The records of the descendants from this marriage and of Gysbert's ancestry are included in the Bogart chapter.

CHAPTER XIII

- LUBBERTSEN LINE

Altho brief accounts of FREDERICK LUBBERTSEN are given in T. G. Bergen's "Register of the Early Settlers of Kings County, Long Island", p. 194, and "Bergen Family", 1876, pp. 126-132 ; Stiles' "History of the City of Brooklyn", v. 1, p. 63; and Orville Corson's "Three Hundred Years with the Corson Families in America" , 1939, pp. 31-43, the writer has seen no single compilation listing all the important records of him , together with complete information as to documentary sources from which these records have been taken. This work represents, therefore, an effort to prepare a brief, but reasonably complete documentary account of him , and of his family. It should be mentioned, however, that Mr. Corson's work includes very complete details regarding Lubbertsen's second wife, from which marriage is derived the eventual connection with the Van Wagnen lineage.

Persons bearing the name Lubbertsen appear to have been numerous in New Netherlands , particularly in the New Amsterdam and Brooklyn areas. Records of Kings County show several entries in connection with various individuals of the name , a fact which is evidenced by a glance at page 194 of "Early Settlers of Kings Co. L. I." Nelson, in his "History of Patterson, N. J.", page 208 , also gives data of several persons of the name,contemporary with Frederick Lubbertsen, and adds that the name "was not as rare as might be expected". The fact that the name signified "son of Lubbert", according to the ancient Dutch custom , makes it difficult to prove any relationship between these individuals, neither Bergen nor Nelson having made any attempt to do so. Records of Ft. Orange (Albany) also contain entries relative to persons of the name Lubbertsen. I believe some of the individuals may have been related, but efforts to establish this possibility , from a study of baptismal and marriage records of the Dutch Church, have not been successful.

Frederick Lubbertsen was probably born in 1609, and this has been accepted and used by various writers who have had occasion to include information of him as a part of their particular work, the date having been based on a documentary record dated Feb. 20, 1664, in which Lubbertsen, age 55 years , and then a resident at "The Ferry" in Brooklyn, gave testimony and made declarations in regard to certain actions of Capt. John Schot, an Englishman. It should be noted however, that the date of 1664 does not rule out the possibility of his having been born in 1608. (Docs. v. 2, pp. 482, 483).

The "Ferry" referred to is described by Stiles, in his "History of the City of Brooklyn", v. 1, p. 44, as identical with the Fulton Ferry which operated in later years from the foot of Fulton Street, and Maude Wilder Goodwin, in her "Historic New York", v. 2, p. 390, gives the location of Lubbertsen's farm as south of the "Ferry" and along the present heights and East River shore.

Probably no record exists which would indicate the date of his arrival in New Netherland, but the fact that he was an early settler is evidenced by several records, the earliest of which is in the form of a contract of sale of land by certain Indians to the commissary, Jacob Van Curler, for the Dutch Government, dated June 8, 1633 and signed by Lubbertsen as one of the witnesses. On Oct. 25, of the same year, he was one of three signers of an order which directed a group of traders to depart from this land, then occupied by them, but little attention was given to it. (See English MSS v.69, p. 2; Cal. v.2, p. 507; and Docs. v.2, pp. 139-140). Years later, on Feb. 10, 1664, Lubbertsen and others, made a declaration that the Indian deed for this tract (now Hartford), located on the Connecticut River, was a true copy of the original deed, they having been the surviving witnesses. (English MSS v.69 p. 2; and Cal. v. 2, p. 507).

The minutes of the Amsterdam chamber of the Dutch West India Company, 1635-1636, have been translated and published in the New York Genealogical and Biographical Record, vol. 49. An entry on page 228, dated Nov. 13, 1636, reads as follows:-

"Frederick Lubbertsen, freeman in New Netherland, requests that his wife, Styntjen Jans' daughter, may join him at the first opportunity, according to the declaration of Wouter Van Twiller, and as there is still due her husband, by the Company - from over 3 years ago - 6 months wages at 20 guilders ($8.00) per month, which the directors have always promised to give here when her husband should return, and he now remains there, she requests she may receive the same." It was referred to the commissioners of New Netherland.

He is described as "chief Boatswain" (for Governor Kieft, a position which he is said to have held as early as 1638), in a power of attorney which he gave to Hendrick Cornelissen Van Vorst on April 4, 1639, authorizing the latter to collect money due him from the Dutch West India Company at Amsterdam, Holland. (Dutch MSS v.1, p. 95; Cal. v.1, p. 5; and Trans. v.1, p. 109). This may have referred to the wages mentioned in the preceeding paragraph.

One of the most important records of Lubbertsen is the land patent granted him by Governor Kieft on May 27, 1640, for a large tract on Long Island. Altho then a resident of New Amsterdam (New York City), he had apparently decided to eventually remove to the opposite side of the East River. The land is described as being "on Long Island near Merechkawickingh (Indian name for Brooklyn) about Werpos". (P. v. G-G, p. 53; Cal. v.1, p. 366; Docs. v.14 pp. 31-32; and O'Callaghan's "History of New Netherland", v.2, p. 581). The patent included the provision that whenever the Indians were willing to part with their adjoining maize land, Lubbertsen was to have the privilege of acquiring this additional tract. The maize land was along the east side of Court Street, somewhere between Atlantic and Baltic Streets. (Stiles' "History of the City of Brooklyn", v. 1, p. 54).

Perhaps the best description of the land patent is given by Stiles, in his "History of the City of Brooklyn", v.1, pp. 28-29, and 63-65, from which it is found that the tract was on the north side of Gowanus Cove,-with water frontage on the East River, Gowanus Cove and the Mill Creek, as well as a portion of the salt meadows. It comprised the whole neck of land between the East River and Gowanus Creek, northeast of the meadows which formerly separated Red Hook from Brooklyn, and was, with the exception of Red Hook, the largest portion of what is now South Brooklyn. It also included a large tract of upland, the entire patent being bounded by..... the East River, Hamilton Avenue, Gowanus Creek, and by Warren Street, east of Court. From Stiles' description it is difficult to accurately define the northern and part of the eastern limits of the property, but from the patent itself, it is evident that it was about a mile in depth from the East River and it has been accepted as fact, that its frontage on the East River was also of about a mile. The "neck" referred to has long since lost its identity. Ross, in his "History of Long Island", vol. 1, p. 58 also describes the property as having covered most of South Brooklyn.

Ostrander's "History of Brooklyn and Kings County", volume 1 pp. 37-38; and Stiles' "History of Kings County and the City of Brooklyn", vol. 1, pp. 80-81, 84-85, duplicate the records included in Stiles' "History of the City of Brooklyn", volume 1, as previously quoted. A map of the patent is included in the Bergen genealogy, facing page 533. Mr. Corson, previously mentioned, locates the homestead as having been near the junction of the present Hoyt and Warren Streets. (See also, Stiles' "Brooklyn", vol. 1, p 421)

A confirmatory patent for the land, was given Lubbertsen, on Mar. 28, 16[illegible], by the English Governor Nicolls. (Liber 4, Patents p. 30, office of the Secretary of State; and Stiles' "Brooklyn", vol. 1, p. 65).

Exercising his privilege in regard to the maize lands of the Indians, Lubbertsen secured a patent, Sept. 4, 1645 for this area which adjoined his patent of 1640. (L. P. v. G-G, p. 114; Cal. v. 1, p. 369; Docs. v. 14, p. 61; and New York Genealogical and Biographical Record, v. 46, p. 224). The tract contained 15 morgens, 52 rods (about 30 acres), and had a water frontage on the East River of 955 feet, 6 inches. (Stiles' "History of Brooklyn", vol. 1, p. 79). The size of the tract is incorrectly given as 50 morgens, 52 rods in the "Calendar of Historical MSS", vol. 1, p. 369; and its location is incorrectly given in O'Callaghan's "History of New Netherland", vol. 2, p. 583, and the Bergen genealogy (1876), p. [illegible], as having been on Manhattan.

The land which he had secured in 1645, was sold on March 7, 16[illegible], to Jan Hendricks Stelman, for 450 guilders ($180), Lubbertsen's son-in-law, Jacob Leendertsen van der Grift acting as his attorney. (Trans. v. 3, p. 305; Docs. v. 14, p. 163). This would

seem to rule out Bergen's statement in his "Register of the Early Settlers of Kings County, L. I.", p. 194, to the effect that this was the land on which Lubbertsen settled (about 1653).

Lubbertsen and Maryn Adriaensen made a declaration on June 2 1641 that they had purchased cows from the late Vroutje Ides, the widow of Cornelis Van Vorst, and on Sept. 12, 1641, they were ordered to declare on oath that they had no other accounts with Hendrick Van Vorst than those relating to the cows purchased from Vroutje Ides. (Dutch MSS v.1, p. 249; v.4, pp. 99-100; Cal. v.1, pp. 15, 76; and Trans. v. 1, p. 286).

Lubbertsen, Jacob Stoffelsen, and others were sued for debt on Aug. 8, 1641, by the guardians of the children of the late Van Vorst, but it was proved that payment had been made to Stoffelsen who apparently had not, in turn, paid Van Vorst. Judgment was therefore made accordingly. (Dutch MSS v. 4, p. 98; and Cal. v. 1 p. 76).

He was one of the "Twelve Men", elected by the commonalty, and empowered by them to resolve on everything with the Director-General and the Council. They were elected Aug. 29, 1641, at the request of Gov. Kieft, to advise him on the course to be followed in dealing with the Indians as a result of a murder committed by one of their number. (Docs. v.1, pp. 414-415; History of the State of New York, by Columbia Univ. Press, v.1, p. 277; O'Callaghan's "Register of New Netherland, 1626-1674", pp. 52-53). The board of the "Twelve Men" was abolished Feb. 18, 1642, its recommendations not having been heeded too strongly by Kieft, whose record shows a general lack of tact in handling the Indians.

On April 1[illegible], 1643, Lourens Cornelissen deeded to Lubbertsen his house in the Smith's valley, in New Amsterdam (New York City) and on May 29 the latter gave his receipt for the house on condition that Cornelissen deliver enough stone to build an oven of a capacity sufficient to bake a schepel and a half of wheat. (One schepel= .764 bushels). On the day following, Cornelissen gave a receipt for 1000 guilders ($400) for part payment for the house. (Dutch MSS v.2, pp. 51, 59; Cal. v.1, p. 22; and Trans. v.2, pp. 101,116). This may have been the property which Lubbertsen deeded to Albert Cornelissen, June 3, 1653, the approximate year in which Lubbertsen removed to Long Island. (Dutch MSS, v.3, p. 109; Cal. v.1, p. 56; and Trans. v.3, p. 315).

A deed dated June 26, 1643, from Lourens Cornelissen Van Der Wilde to Lubbertsen, is a matter of record and is for a house and lot on the east side of the Smith's valley, containing 357 rods, 9 feet, 2 inches. (Rod= 12.36 feet; foot= 11.304 inches). (L.P. v. G-G, p. 68 and Cal. v.1, p. 367). This may have been the property which he sold on Jan. 10, 1658, to Jan Peeck, and which is described as having been located on the Smith's Vly (Valley), on what is now the corner of Pearl Street and Maiden Lane, but which then faced the East River. (N. Y. Genealogical and Biographical Record, v. 17, p. 215).

In an action which he brought against Lourens Cornelissen on Sept. 2, 1644, the latter stated that he would willingly build a dyke in front of the plaintiff's house and lot , if the director repaired the road in front of the secretary's , (Cornelissen's?) house. (Dutch MSS v. 4, p. 200, 201; and Cal. v. 1, p. 91).

Lubbertsen owned a negro named Anthony, whom he deeded to Richard Lord on Nov. 28, 1646. (Dutch MSS v. 2, p. 152; Cal. vol. 1, p. 35; and Trans. v. 2, p. 316).

He was given a patent for a lot in New Amsterdam on Jan. 21, 1647. (O'Callaghan's "History of New Netherland", v. 2, p. 585) .

July 23, 1647, he gave his note to Cornelis Van Tienhoven , for 900 Carolus guilders. (Dutch MSS v.2, p. 160; Cal. v.1, p. 39 and Trans. v. 2, p. 380).

Claes Jansen, referred to as his brother-in-law , received a power of attorney from Lubbertsen on Aug. 17, 1648 , authorizing him to collect a debt in Holland, from Jan Hett. (Dutch MSS v. 3, p. 1; Cal. v.1, p. 42; and Trans. v.3, p. 6). The brother-in-law relationship was based on the fact that Jansen, (whose full name was Claes Jansen Ruyter Van Naerden) and Lubbertsen, had married sisters, Pieterje Jans and Styntje Jans respectively. (N. Y. Genealogical and Biographical Record, v.65, pp. 125, 126, 130, 131).

It is possible that Lubbertsen was living on his property on Long Island as early as Jan. 4, 1652 , a deed being recorded with that date, in which the property is mentioned as having been located next to the land on which Lubbertsen lived. (Dutch MSS v. 3 p. 100; Cal. v. 1, p. 55; and Trans. v. 3, p. 296).

He [illegible]red prominently in the official life of Brooklyn from the t[illegible] first located there. O'Callaghan's "Register of New Nethe[illegible], 1626-1674", page 75, lists him as magistrate of that villa[illegible] 1653, with notation "died 1679"; and elected April 9, 1654, and April 13, 1655. He was also elected on March 20, 1664 . (Register, p. 75; and Docs. v. 14, pp. 314, 545). The Bergen genealogy, 1876, also lists him as magistrate in 1671, 1672 and finally in 1674.

The elections of magistrates (or schepens, as then titled) , were made by the Director-General and the Council, from the nominations made by the incumbent schepens and schout (sheriff). This method of election was one of the grievances which the citizens had against the officials of the colony. Lubbertson was a signer, Dec. 30, 1653, of a remonstrance to the burgomasters of Amsterdam Holland, which complained of the methods under which the colonies and villages were governed, with little or no opportunity for the inhabitants to have a voice in saying who should be their magistrates and officers; of the enactment of laws unknown to the inhabitants; refusal of deeds to many persons, etc. He had also been a signer of the original petitions, dated December 10 and 13 which had been sent to the Director-General, Peter Stuyvesant who

rejected them. (Docs. v.1, pp. 549-555; Stiles' "Hist. of Brooklyn", v. 1, p. 108; and O'Callaghan's "Register of New Netherland 1626-1674", pp. 142-143).

Early in February, 1654, Lubbertsen -then a magistrate - and seven others, signed a document directed to the Director and the Council, asking that a force of 40 men be raised from the several towns for the common defense, in order to combat the increase of piracy on Long Island Sound, and robberies on Long Island. (See Stiles' "History of Brooklyn", v. 1, pp. 109-110).

He sold to Stuyvesant, Dec. 23, 1655, some cattle, for which the Director-General gave him a note in the sum of 450 guilders, the equivalent of about $180. (Dutch MSS v. 3, p. 141; Cal. v. 1, p. 60; and Trans. v. 3, p. 404).

Several entries, relative to Lubbertsen, have been included in Berthold Fernow's "Records of New Amsterdam, 1653-1674". These are translations of the original minutes of the court of Schepens and Burgomasters, and have been grouped here as a unit.

The earliest record noted, is of a suit brought for Andries Kittestym against Lubbertsen and Harmen Douwesen, for payment of 12 guilders ($4.80), for lace purchased by them. Dated Oct. 12, 1654, the suit was dismissed when Douwesen declared under oath, that they had given a note for the amount, that it had been paid in full, half by each of them, in beavers, before Lubbertsen departed from Manhattan, and that the note was torn up in the presence of Douwesen, but no receipt given. (v. 1, pp. 250-251).

Altho an account has already been given of certain pieces of property owned by Lubbertsen in New Amsterdam, yet the possibility that he also owned additional property is evidenced by an entry dated Jan. 18, 1655, at which time he entered a suit against Warner Wessels for money still due on the purchase of his house, from a contract dated Mar. 9, 1654. In the event of non-payment, it was asked that Wessels return the house and pay rent for the time he had lived in it. Apparently Wessels settled his account on May 1, but in another suit, June 21, 1655, Lubbertsen claimed that he was still owed a balance, as the wampum in which payment had been made, was not all merchantable. Wessels claimed however, that he had offered good wampum and that Lubbertsen had declined it. Exhibited in court, June 28, it was pronounced good, but the court ordered Wessels to obtain merchantable wampum in place of that which was judged not good, and fined him 12 stivers for having given the lie to the court. (v. 1, pp. 277, 322; 325-326).

The tables were turned, Aug. 23, 1655 when Wessels brought a suit against Lubbertsen, in which he claimed the latter had not delivered all the goods for which he had given Lubbertsen a bill of exchange for 600 guilders ($240). The following day, Wessels asked for a final settlement, Lubbertsen to pay the balance then due, by exchange on Holland. The case was postponed, but no final

disposition of the case has been noted. It is probable that it was settled out of court. (v. 1, pp. 345-346; 350).

July 3 , 1656, Lubbertsen brought suit against Jacob Couwenhoven for payment for a horse , the court ordering the latter to pay or return the horse. The case was brought up again Sept. 25 . (v. 2,. pp. 132, 172).

He acted as attorney for Isaac Mens, in September and October, 1656. (v. 2, pp. 165, 168, 172, 179, 197).

On May 20, 1658, he sued Jacobus Vis for 280 guilders for tobacco, evidently the result of his sale of a horse to Jacob van Couwenhoven (also known as Jacob Wolfersen van Couwenhoven) , for which payment had not been given, and for which debt, Vis was the surety. The court ordered Lubbertsen to first sue the principal , and suit was therefore entered on May 27, at which time van Couwenhoven said he had given some silverware as a pledge , and that the balance was to have been in tobacco from his brother-in-law . Lubbertsen said the tobacco was not good. The court ordered that the debt be paid by van Couwenhoven within 48 hours, and failing, then Vis was to pay. (v. 2, pp. 386, 388).

Difficulty was encountered, in trying to collect from Vis , and Lubbertsen brought suit against him, June 17. Vis then made an appeal to the Director-General and Council of New Netherland , asking that the ruling of the court be set aside. (v. 2, pp. 400-401; 404). No further record having been noted, the case probably was settled out of court.

He was nominated for schepen of New Amsterdam, Jan. 30, 1658 but was not elected. (v. 2, p. 319).

He was involved in minor suits, Nov. 1, 1661 and May 8,1666. (v. 3, pp. 397-398; and v. 6, p. 1).

June 5, 1674, he was sued by Cornelis Van Borsum for 13 beavers in settlement for yearly money owed to the deceased former husband of his wife. The debt was denied, on the grounds that regardless of the amount, it was taken into account in the purchase of a house made with her son, Hans Kierstede, Jr. Lubbertsen then sued Kierstede for a discharge from the debt claimed by his mother, but a deed was produced which clearly did not include any provision for disposing of the yearly money due his father. The court therefore dismissed Lubbertsen's suit , and it is presumed that he made a settlement with Van Borsum. (v. 7, p. 92).

Lubbertsen attained the status of "small burgher", April 17, 16[illegible] ("Register of New Netherland", p. 182, and Wilson's "Memorial History of the City of New York", vol. 1, p. 305), and was admitted as a "great burgher", Jan. 23, 1658. (Records of New Amsterdam, vol. 2, pp. 314-315). His second wife, Tryntje Hendricks also became a "small burgher" with her husband.

An explanation of the burgher system is given on pp. 173-174 of the "Register of New Netherland". Burgher right provided for the citizen, freedom of trade, exemption from toll and from being sued by a fellow burgher except in his burgh. He could not be imprisoned without bail, nor tried for any offense after the lapse of a year. He was saved from attaint and confiscation, if found guilty on a capital charge, for he could not, for any crime, forfeit more than his life and one hundred guilders ($40). Burgher right by descent or inheritance, was gained only through the male line. Only the "great" burghers could fill public office and enjoy exemption from confiscation and attainder, if convicted of a capital offense. All members of the council, all burgomasters and schepens, ministers, military officers, and their descendants in the male line, were declared by the charter, "Great Burghers" . Others might become such also, on payment of 50 guilders into the city treasury. A "small" burgher was entitled only to freedom of trade and the privilege of being received into his own guild . Natives of New Amsterdam, residents there for a year and 6 weeks before the date of the charter, burghers' sons-in-law, city store keepers, and all paying 25 guilders were entitled to be "small" burghers.

Lubbertsen and his second wife, Tryntje Hendricks, are listed as members of the First Protestant Reformed Dutch Church , in Brooklyn, Mar. 12, 1660. (Stiles' "History of Brooklyn", vol. 1, pp. 425, 426).

From the numerous New Amsterdam records of Lubbertsen, after the time of his removal to Brooklyn , it appears likely that he may have returned to the former place for a time at least. He was elected schepen of New Amsterdam, Feb. 1, 1661, and nominated on Feb. 1, 1662, but failed of election. (Records of New Amsterdam , v. 3, pp. 257-260; and v. 4, p. 26).

He evidently planned to move to Pavonia (now Hudson County , N. J.), as on May 11, 1662, he and others petitioned for leave to settle a hamlet on land heretofore occupied by Michael Tadens, and permission was granted. (Dutch MSS v. 10, p. 133; Cal. v. 1, page 237; and Nelson's "History of Patterson, N. J.", p. 208). No records have been seen by this writer, which would indicate that he ever lived there, however.

He and his wife were received into the Reformed Dutch Church of Brooklyn, with letters from Manhattan, Dec. 25, 1662. (Holland Society Yearbook for 1897, p. 135).

He was a representative from Brooklyn, July 6, 1663 , at a convention held in New Amsterdam for the purpose of engaging the several Dutch towns to keep up an armed force for public protection (Register of New Netherland, pp. 143-144).

From a letter dated Jan. 23, 1664 , from the Dutch towns on Long Island, to the Director-General and Council of New Netherland, describing certain acts of Capt. John Schot, an Englishman,

and his men, on Jan. 11 and 12, it has been noted that Lubbertsen would have been stabbed and killed, were it not for the fact that his attackers had been prevented from carrying out their intentions. (Docs. v. 2, pp. 403 and 483).

He was a deputy from Brookland, Mar. 1, 1665, at the general meeting held at Hempstead, L. I., with the Deputy-Governor. (Docs. v. 14, p. 565).

The council of war, meeting at Ft. William Hendrick, Aug. 18 1673, selected him as one of the schepens of Brooklyn, this having been during the period after the Dutch had regained temporary control of New Netherland. (Docs. v. 2, p. 577; and O'Callaghan's "Register of New Netherland, 1626-1674", p. 75).

In a Brooklyn tax list dated Aug. 20, 1675, he is shown to have had nine cows, seven sheep, and fifteen morgens (30 acres), of land and valley, with a total valuation of £136.10. (Stiles' "History of Brooklyn", v. 1, p. 431).

In 1676 he sold to Adam Brouwer a piece of meadow adjoining the dam of the Gowanus Mill (Brooklyn). (N. Y. Genealogical and Biographical Record, v. 9, p. 126).

He signed his name in records, with his signature.

He made a joint will with his second wife, Tryntje Hendricks on Nov. 22, 1679. (Liber I of original conveyances, Kings Co., p. 315), and died either in the latter part of the same year, or in the next year. This is established from a petition made by Jacob Leendertsen and Rebecca Fredericksen, his wife, daughter of Frederick Lubbertsen, deceased, for redress of certain injustices done her by her late father's will. This petition was made in the year 1680, but the exact date does not appear to be a matter of record. (English MSS v. 29, p. 4; and Cal. v. 2, p. 83).

An abstract of the will appears in the N. Y. Genealogical and Biographical Record, v. 47, p. 168; and v. 64, pp. 233, 234. The will was proved July 10, 1693.

Lubbertsen was married twice. His first wife is said by some writers to have been Styntje Jans. Others, however, state she was Styntje Hendricks, possibly a sister of his second wife, Tryntje Hendricks. The record of his second marriage names him as widow-er of Styntje Jans. She was living as late as Feb. 16, 1654, when she was a witness in Burgomasters and Schepens Court. (Records of New Amsterdam v. , p. 160). They had one daughter Rebecca Fredericksen, who married Jacob Leendertsen (Van der Grift), July 19, 1648. (Collections of the New York Genealogical and Biographical Society, v. 1, p. 15). Records of a few descendants appear in the New York Genealogical and Biographical Record, v. 64, p. 160, and in vol. 1 of Mr. Corson's work.

Lubbertsen married, as his second wife, TRYNTJE HENDRICKS, widow of Cors Pietersen (Vroom), on a date sometime between August 17 and Oct. 13, 1657. (Collections of the New York Genealogical and Biographical Society, v. 1, p. 22). Bergen's "Early Settlers of Kings County, L. I., p. 194; Bergen Family (1876) p. 127; Nelson's "History of the City of Patterson, N. J.", p. 208 ; and the New York Genealogical and Biographical Record, v. 47, p. 168, all indicate the date as Aug. 17. This is clearly an error, as Tryntje appeared in Orphans Court, Sept. 19, and Lubbertsen was listed as her "Fiancé". No record has been seen which would indicate the date of Tryntje's birth. The earliest record of her is a suit instituted by her first husband, Cors Pietersen, against Adam Roelantsen, for recovery of his wife's share of her deceased mother's estate, judgment being returned in favor of Pietersen, the action being recorded under date of June 10, 1638 in New Amsterdam. (Dutch MSS v. 4, p. 11; Cal. v. 1, p. 62; and the Somerset County (N. J.) Historical Quarterlies, v. 2, p. 129).

Her first husband gave his receipt, Jan. 27, 1639, for the sum of 51 Carolus guilders, due his wife from the estate of her parents. (Dutch MSS v. 1, p. 72; and Cal. v. 1, p. 5). Mr. Corson includes as a part of his studies of the Corson families, a very complete discussion of Tryntje Hendricks, part of which is devoted to the suit instituted in 1638, and the settlement of it in 1639. From the latter record, several important facts are obtained. Of secondary importance is the fact that Cors Pietersen, her first husband, came from Langeraer, Holland, said by Mr. Corson to be located 6 miles east of Leyden, on a small canalized river, known as the Aar. It is possible then, that Tryntje also came from that place. Of primary importance, however, is the fact that the document gives the name of her father as HENDRICK TOMASSEN, indicating that his father's name was TOMAS - and the name of her mother as ELSJE MARTENSEN, the father evidently having been named MARTEN. After the death of Tryntje's father, her mother, Elsje, married, as his first wife, Adam Roelantsen, who had been the defendant in the action brought by Tryntje's first husband, Pietersen. That her mother died prior to June 10, 1638, is established from the record of that suit.

A record, of which the writer has no date, pertains to the sale of her claim on her father's estate, and has been translated and may refer to the preceeding paragraph. (Trans. v. 1, p. 81).

By her first marriage, Tryntje had four children ; Cornelis Corsen, bp. April 23, 1645; Grietje Corsen, bp. May 25, 1648, who apparently died young; Pieter Corsen, bp. Mar. 5, 1651; and Hendrick Corsen, bp. Nov. 30, 1653. (Collections of the N. Y. Genealogical and Biographical Society, v. 2, pp. 19, 24, 29, 36). Some additional records of descendants of these children are included on page 128 of the Bergen Genealogy (1876), and Mr. Corson's work vol. 1, includes a detailed account of the family. One of the descendants from Tryntje's first marriage, and through her son, Hendrick Corsen, was Peter D. Vroom of New Jersey. He married Elsie Bogart, a great-great-granddaughter of Tryntje, through her

second marriage (to Lubbertsen). Peter D. Vroom and Elsie Bogart were the parents of Peter D. Vroom, Jr., twice Governor of New Jersey. Elsie was a sister of SARAH BOGART, whose ancestry is included in the Bogart chapter.

A statement appearing on page 48 of vol. 30 of the New York Genealogical and Biographical Record , which refers to Cors (Cornelis) Pietersen, Tryntje's first husband, as a member of the Van Deusen lineage, is an error, as he was the ancestor of the Corson and Vroom families.

On Sept. 16, 1657, Tryntje, then the widow of Cors Petersen, appeared in Orphanmasters Court (New Amsterdam), stating that she intended to become the wife of Lubbertsen, and wished to make the necessary arrangements, before her re-marriage , to settle on her three infant sons (ages 12, 6, 3), their paternal inheritance so that they would receive what was due them when they became of age. The court appointed two burghers as guardians, and they were authorized to make an agreement with Tryntje, on behalf of the 3 children, based on their estimate of the estate as inventoried . This having been determined, both parties agreed, Sept. 19, 1657, that Tryntje was to bring up each child, have them taught reading writing and a good trade as well as religious training until they either became of age or married, at which time each was to have, as their share, 600 guilders ($240), and a "good" parcel of wearing apparel. Her house and lot on the north side of Pearl Street, adjoining the fort on the south side, was to be pledged as security for the 1800 guilders. In the record of Sept. 19 , Lubbertsen is referred to as her "fiance", therefore they were married some time after that date. (Minutes of the Orphanmasters Court of New Amsterdam, 1655-1663, by Berthold Fernow, v. 1, pp. 37-41; Somerset County (N. J.) Historical Quarterlies, v. 2, p. 130; and the Holland Society Yearbook for 1900, pp. 113, 114).

Lubbertsen and Tryntje Hendricks had two daughters , both of whom were baptized in New Amsterdam.

(1). ELSIE FREDERICKSEN, bp. July 7, 1658, and

(2). Aeltje Fredericksen, bp. July 25, 1660.
(Collections of the N. Y. Genealogical and Biographical Society, v. 2, pp. 49, 57).

Aeltje married Cornelis Sebring, Sept. 3, 1682. (Flatbush Church records in the Holland Society Yearbook for 1898, p. 90) . A few records of their descendants are included on page 127 of the Bergen genea

ELSIE married, in Brooklyn, July 8, 1677, JACOB HANSEN BERGEN. (Brooklyn Church records in the Holland Society Yearbook for 1897, pp. 141-142). Her name is given as Elsie Fredericksen Van der Kreest.

Tryntje died prior to July 10, 1693, on which date her will was proved. Made jointly with her husband , whose death occurred not later than 1680, the will provided that Elsie was to receive the farm on which she and her husband were living , and on their decease it was to become the property of their children. Rebecca, the daughter by Lubbertsen's first marriage, was to receive 600 guilders and Aeltje a farm. Peter and Hendrick Corson , Tryntje's sons by her first marriage were to receive in equal amounts, certain lands, with the provision that they were to pay their brother, Cornelis Corson, fairly for the third which would have been his share, had he not already been the owner of land of his own , (on the Raritan River, N. J.). Tryntje bequeathed her gold and silver jewelry to her two surviving daughters, with the residuary estate to be divided among the children. (New York Genealogical and Biographical Record, v. 47, p. 168).

Elsie and her husband, Jacob Hansen Bergen, in a quit- claim deed dated April 7, 1726, released to her sister, Aeltje , then a widow, 235 acres of upland and meadow, exclusive of Aeltje's old farm. In turn, Aeltje released two parcels of about 140 acres , and 10 acres, respectively, to Elsie and her husband. (Bergen Family, 1876, pp. 131-132). Records of their family and of his ancestry are given in the Bergen chapter of this current work.

CHAPTER XIV

BODINE LINE

Foreword

The writer has made an extensive search for , and a detailed study of, published records of the Bodine family. An examination of the material thus found indicates that much of it is either based on or is a foundation for a treatise on the family, compiled by Mary Elizabeth Sinnott, and published in 1905 at pages 151-173 in her "Annals of the Sinnott, Rogers, Coffin, Corlies, Reeves Bodine and Allied Families". The existence of a marriage record which was not incorporated in Miss Sinnott's work , altho it had already appeared in print as early as 1898, tends to cloud the correctness of some of the data of the earlier generations of the family. For the most part, Miss Sinnott's work shows evidence of having been carefully prepared, many authorities being quoted by her in support of her analysis of the various family lines. It seems proper, therefore, to suggest that the major portion of her compilation is correct.

In an effort to correctly establish the Bodine line for this volume , an extensive search has been made for additional source material which might have been published since the work by Miss Sinnott, but which had not been found in the local libraries. Inquiries directed to a number of authoritative sources , including the Library of Congress, reveal that apparently no further data has been published, other than partial accounts which evidently derive their contents from Miss Sinnott's work.

In order to give full weight to her compilation, the material on the following pages is based on her records , and certain features which represent additional information , or opinions of this writer, are enclosed parenthetically, in order to avoid confusion. Several Richmond County, N. Y., (Staten Island) records are quoted by Miss Sinnott, and they are assumed to refer to the correct individuals in all cases, as said records are not available to the writer. In view of certain comments which appear in the pages which follow, the reader will readily understand this writer's reasons for stating that all the information set forth cannot be accepted fully as fact, and it is hoped that in the absence of clarifying documentary evidence , some reader may have correct data which will either confirm or deny the early family relationships as set forth by Miss Sinnott , and used here reservedly, subject to the limitations as hereinafter set forth.

BODINE LINE

The Bodines of America have their origin in the family "le Boudin" and the antiquity of the name is attested by French charters of the twelfth century. The family was settled in Cambray, in France, originally a district in the Low Countries, as early as 1126, according to the "History of Cambray", vol. 1, p. 174, and its coat-of-arms is a matter of record.

The family has given to the world the noted political thinker and philosophical reasoner, Jean Bodin, the father of political science-if Machiavelli be excepted. Sir William Hamilton said of him that from the time of Aristotle until Montesquieu, Bodin's "Six Books of the Republic" form the ablest and most remarkable treatise extant on the philosophy of government and legislation.

(No information is given by Sinnott, nor probably is any in existence, showing the connection between this Jean Bodin, and the Jean Bodine who was the first of the family in America. However, because of its interest, an account of the scholar, Jean Bodin is included here, as given in the Encyclopedia Americana:-

"Jean Bodin, French scholar and innovator in economics and political theory, was born in Angers, May 31, 1530, and died at Laon, in 1596.

He studied law in Toulouse but was not entirely successful, in its practice in Paris. He abandoned this for political and economic study, lightened by the favors of Henry III with whom he was for a time intimately associated, as afterward he accompanied the King's brother, the Duc d'Alençon, to England for the hand of Queen Elizabeth. His first book was a translation of a hunting manual into Latin verse.

The first book of serious significance was one written in 1574, which was an enlightened contribution to the theory of prices. In this he was the first to satisfactorily explain the revolution in prices during the 16th. century and treated sanely of the relation of money to prices and to wages.

In 1576 he was made King's attorney and elected a member of the Third Estate, for the States-General at Blois. Here he defended brilliantly, freedom of conscience, under very difficult conditions, resisting both clergy and nobility in their desire to enforce conformity. By resisting the King's desire to alienate public lands, he lost royal favor for his defense of the public rights.

In 1577 appeared his "Six Books of the Republic", a book often reprinted and regarded by some as entitling its author to rank with Aristotle and Montesquieu, among the greatest of political philosophers. It was the first attempt since Aristotle's 'Politic', to build a complete system of political science.

On visiting Oxford and Cambridge, in 1581, he found that his book was known only in a bad Latin version, and published his own translation in 1586.

He declared for the League in 1589, and for Henry IV in 1594 and died of the plague in 1596, leaving unpublished a conversation between seven persons, each of a different faith, looking to the broadest tolerance, consistent with public morals and national well being". This was later published in 1847).

1. JEAN BODINE, of the Cambray family, is said to have removed to Medis, province of Saintonge, France. He was probably a Huguenot, and left France to find asylum in other lands. It is thought that he made a short stay in Holland and England before coming to New York. The first record of him is that in which he and Marie Creison witnessed a baptism on November 3, 1677, in the Reformed Dutch Church. (Collections of the New York Genealogical and Biographical Society, vol. 2, p. 130). (He may have been the Jean Bodin, who, with Maria "Gerilon", witnessed a baptism, in Flatbush, April 27, 1679, according to the Holland Society Yearbook for 1898, at page 111). He settled on Staten Island. (The earliest record of him there appears to be in the form of a petition made by him and most of the other Walloons living on Staten Island, in which they asked that they not be compelled to contribute to the support of Morgan Jones, a pretended minister of the gospel. Dated Jan. 15, 1683, this petition was answered Jan. 19. English MSS v. 31, pp. 3, 6, 9; and Cal. v. 2, p. 102). He had a survey of land on Staten Island, April 1, 1686 according to Richmond County, N. Y., Deeds, book D, p. 131.

(A declaration of trespass was made by Mathew Plowman, Oct. 29, 1691, against Bodine and others, and on an unrecorded date, Bodine and the others petitioned that the action taken against them by Plowman for taking his beef a pork be discontinued, as they had acted under the authority of Jacob Leisler. English MSS v. 38, pp. 32, 57; and Cal. v. 2, pp. 2[illegible] 220).

He died before Mar. 4, 1695, when his estate was administered upon by Paulus Richards, the principal creditor. (The records of the granting of the letters of administration, the inventory of the estate and the account of the administrator which was approved and which shows the estate settled Dec. 26, 1695, are included in the Collections of the New York Historical Society, v.1 of Abstracts of Wills, pp. 249, 254, 260, and based on the original records in liber 5-6 at pp. 76, 87, 106). Apparently exclusive of land, the inventory of the estate showed a valuation of £242. His son, Jean, appeared as a defendant in a suit against the estate, before its final settlement.

Nothing is known of his wife or any children other than a (supposed) son:

2. JEAN BODINE, born according to tradition universal in the family, at Medis, France, May 9, 164[illegible], and naturalized in London, England March 21, 1682 with his (second) wife Esther Bridon, her brother Francis, and their parents, Francis and Jane Susanna Bridon. Jean and his wife resided for a time at Rye, in

Sussex, England, where at least two of his children were born, according to the Registers of Rye. He later emigrated to the New World, and was living on Staten Island in 1695, at the time of his father's death there. He purchased on May 12, 1701, eighty acres of land on the west side of Staten Island, at Charles Neck, and removed there almost immediately, as his cattle mark was entered there the following year, according to Richmond County Deed book B, page 402 and Richmond County Court Records.

(On Sept. 23, 1708 he petitioned for a patent of confirmation for a tract of land on Staten Island. Land Papers, v.4, page 141; Calendar of Land Papers, p. 87; Council Minutes, 1668-1783, vol. 10, p. 227; and Cal. of Council Minutes, 1668-1783, in New York State Library Bulletin #58, 1902, History 6, p. 220. The patent was granted on the next day, per Council Minutes, vol. 10, p. 228, and Calendar page 221).

(He appears to have sold this land prior to May 22, 1722, on which date Jaques Pullion petitioned for a warrant of survey of the tract which was described as being on the south side of Staten Island, confirmed by patent to Bodine, and then (1722), vested in the petitioner. Land Papers, vol. 8, p. 155; Calendar of Land Papers, p. 160 Leng and Davis, in their "Staten Island and its People", vol. 2, p. 866, state that this land was located at the present Eltingville).

A few days earlier, on May 8, 1722, he had purchased from Francis Bridon another tract of eighty acres at Charles Neck, and on Feb. 2, 1736, the heirs-at-law to Bridon (brother-in-law of Jean Bodine), conveyed to Bodine, a dwelling and tract of ten acres at Charles Neck, according to Richmond County Deeds, book C p. 299 and book D, p. 131.

He was living as late as Mar. 7, 1737 when he and his wife, Esther, sold lands on Staten Island per Richmond County Deeds, book D, p. 131. (They appear to have also sold another parcel of land at Charles Neck, on the same date, consisting of 30 acres, for a consideration of £300 or about $750 according to Clute's "Annals of Staten Island", p. 154).

He signed documents with his signature, his wife signed with her mark.

He married (first)..... Crocheron, the record of whose ancestry is included in the Crocheron chapter. He appears to have had five sons by this marriage. (However, Sinnott states there were possibly other children, her assertion probably having been influenced by the will of Nicholas Crocheron brother of Jean's first wife, in which he bequeaths half his paternal estate to his "nephews and nieces, the children of Jean Bodine by his first wife". This would indicate that in addition to the five sons from this marriage, there were also daughters) (Collections of the N. Y. Historical Society, Abstracts of Wills, vol. 1, p. 445, recorded in liber 7, p. 410).

Jean Bodine married (as his second wife) Esther Bridon , who was the daughter of Francis and Jean Susanna Bridon. Miss Sinnott lists five children by this marriage , three sons and two daughters, one daughter having been born in 1680 and a son in 1681 , at Rye in Sussex, England. The will of one of the five , John Bodine, dated Jan. 2, 1707, and proved June 19, 1724, names his two brothers and two sisters as heirs.(No reference is made to any of the five sons of his father by the first marriage , a fact which appears to rule out any possibility that any of them could have been children by the second marriage instead. The first group with the exception of Vincent - who lived in New York - was identified closely with Somerset County, N. J., while the second group was identified with Staten Island and New York. These facts suggest there was little in common between the groups, and lend support to this writer's opinion that the line with which this chapter is concerned, stems from the first marriage of Jean).

(The given name of Jean Bodine's first wife is not given in Miss Sinnott's account. It has been given, however, in Lee's Genealogical and Memorial History of the State of New Jersey, vol. 4 p. 1368, as Maria Crocheron, and the date of marriage as Jan. 11, 1680. Without doubt, this is based on the record appearing in a list of Flatbush Church records, in the Holland Society Yearbook for 1898, at page 88, Maria's surname being given as "Crossron" . Admittedly, these church records are not entirely reliable, a remark to that effect proceeding them in the Yearbook , the explanation being that they are not copies of the original records, but copies of a copy of the original, said copy in itself having been difficult to decipher. However, further examination of the records in the Yearbook shows that others of the name, as well as of the name "Crocheron", were probably contemporaries of Maria. A study of Crocheron family records appears to indicate that there were several of the name, undoubtedly brothers and sisters, whose names are included in the church records. Unquestionably, there was a Crocheron who became the wife of a John Bodine, as the will of one Nicholas Crocheron specifically refers to his nephews and nieces, the children of John Bodine by his first wife. The writer is of the opinion that this is the record upon which Miss Sinnott based her statement that John Bodine's first wife was a Crocheron and that due to lack of information relative to the date of the marriage, an error may have crept into Miss Sinnott's work when she indicated that this John Bodine married prior to 1680 , possibly in England, as his second wife, Esther Bridon , by whom he had children born there in 1680 and 1681. Obviously, if the record of marriage of John Bodine and Maria "Crossron", is correct , then he could not have been one and the same with the John Bodine whose wife Esther Bridon had children just referred to, and several possibilities suggest themselves as to the effect such a discrepancy could have on a genealogical record).

(Records in the Bogart chapter establish the fact that Guysbert Bogart's second wife was named ELIZABETH BODINE , and that they were the parents of Sarah Bogart who , by her marriage to Conrad Van Wagnen, became the mother of Garret Conrad Van Wagnen, the subject of this work).

Of the three sons of Jean Bodine (#2) and Esther Bridon , it appears likely that one of them, John, never married, as his will previously mentioned , bequeathes his estate to his brothers and sisters. No records have been seen of Eleazor, another son, and the third son, Francis, settled on Staten Island, later removing to Cranbury, Middlesex County. (No records have been seen which would indicate he ever lived in Somerset County, home of Guysbert Bogart).

(Of the five sons listed by Sinnott as the children of Jean Bodine (#2) and (Maria) Crocheron, Vincent (#7) appears to have been the only one to have resided in New York City. Records of his family, as shown by Sinnott , are probably complete , and do not include a daughter Elizabeth , nor as a matter of fact , do they suggest any possibility that the family was ever associated with Somerset County, N. J. The family of Jacob Bodine (#4) also appears to be complete, with no daughter Elizabeth listed. It is believed that he may have lived in Middlesex County, N. J., altho he died in Hunterdon County. Peter Bodine (#5) may have had other children than those listed by Sinnott, and if so, one of them may have been named Elizabeth. In the writer's opinion, however , the parentage of Elizabeth Bodine, who married Guysbert Bogart , can be narrowed down to two possibilities, based on the fact that the other two brothers -of Vincent, Peter and J[illegible]b, already referred to -,Isaac (#3) and Abraham (#6), both had [illegible]ghters Elizabeth . Isaac's daughter was baptized Oct. 14, 171[illegible] [illegible] the Raritan - now Somerville -N. J. Reformed Dutch Church p[illegible] [illegible]omerset County Historical Quarterlies, vol. 2, p. 210; and [illegible]am's daughter was baptized Sept. 23, 1728 at New Brunswick a[illegible]rding to Sinnott , who shows that Isaac's daughter married Jaco[illegible] Van Neste and gives no information concerning any marriage of Abr[illegible]am's daughter . Joris Van Neste was the father of a Jacob Van Neste who was baptized on the same day and in the same church as Isaac's daughter, and who may have been the Jacob whom she married).

Isaac Bodine was married and a resident of Bridgewater Township, Somerset County, N. J., as early as Sept. 26, 1700, when he and his wife were witnesses at a baptism in the Raritan Church , per Somerset County Historical Quarterlies, vol. 2, p. 41 . He was one of the commissioner[illegible] of roads for t[illegible] county, April 16 , 1735. Died intestate and his estate was adm[illegible]stered on by his eldest son, Fr[illegible]erick, Aug. 4, 1752. Isaac[illegible] [illegible]rother , Abraham , also a resident of Bridgewate[illegible] Township whe[illegible] he evidently lived for a number of years, was a [illegible]ellowbondsme[illegible] for Frederick. (Documents relating to the Colonial History of [illegible]e State of New Jersey First Series, vol. 32, Calendar of Wills, [illegible]ol. 3, p. 34).

Bridgewater Township included in its limits, the villages of Raritan, Somerville, and Roundbrook.

Abraham Bodine was a witness at 2 baptisms in the Church at Raritan (now Somerville), in 1715. (Somerset County Historical Quarterlies, vol. 2, p. 142). He purchased, July 18, 1722, 60 acres of land near Piscataway, Middlesex County, where he appears to have been living. He sold this property later, and on April 24 1752, he purchased a tract adjoining his then residence on the North Branch of the Raritan. He may have been the Abraham Bodine who owned a part of the Peter Van Neste tract on the west side of the North Branch. The date of his death is not known.

Isaac Bodine was twice married. His first wife was CATALYN., who was the mother of eight of his children, three daughters and five sons, born in a period from October, 1703 to October, 1719 , and all baptized in the Raritan (now Somerville) Church. The last of the eight children was:-

ELIZABETH BODINE, baptized Oct. 14, 1719. (Somerset County Historical Quarterlies, vol. 2, p. 210).

Isaac married second, Jannetje...., about 1722. She was the mother of three children, two daughters and one son, baptized at the Raritan Church.

Abraham Bodine married, about 1723, Adriantje Jansen. They had ten children, five sons and five daughters , the third child and second daughter was:-

ELIZABETH BODINE, baptized Sept. 23 728 at New Brunswick , N. J.

(Guysbert Bogart's first wife is known have died prior to about 1752, and it is not improbable that ac Bodine's daughter may have been a widow (of Jacob Van Neste that time, and that she may have then married Bogart, who was o. year younger than she. Abraham's daughter, of whose marriage, any, nothing is of record, may also have been the Elizabeth who married Bogart, but the fact that she was some eight years his junior , suggests that she may have been less likely to have been his wife, than was the daughter of Isaac).

CHAPTER XV

CROCHERON LINE

Rev. Charles W. Baird, in his "Huguenot Emigration to America", vol. 2, pp. 186-187, expresses his belief that the Crocheron family may have had its origin in the Waldenesians , an ancient race which lived in the Cottian Alps between France and Italy and whose members suffered greatly, as a race, in the religious persecutions there.

First mention of the name in this country is of JEAN CROCHERON, a planter who was among the emigrants to Staten Island. Leng and Davis, in their "Staten Island and Its People", vol. 2, page 882, indicate that the family came from Flanders before 1677, evidently basing this statement on the fact that Adrianna "Crosseron", married Isaac (or Jacques) Poulion on Oct. 24 of that year . (Flatbush Church records in the Holland Society Yearbook for 1898 at page 87). In the church record they are referred to as natives of Zale, in Walsh Flanders, and living in Brooklyn. The family homestead is said to have been at the present New Springville.

From his will it is known that Jean's wife was named MARY and that two of his sons were Nicholas, the eldest, and Anthony. In the will, dated Dec. 13, 1695, he describes himself as being of a great age, and bequeathed his estate to his wife, following whose death Nicholas was to receive 20 acres of land and the house, and Anthony was also to receive 20 acres. The rest of the estate was to be divided among his other children, whom he does not name. He evidently died the next year, as his will was proved on Sept. 3, 1696. An inventory was made of the estate on Dec. 17, 1696, which showed a valuation of £531, exclusive of real estate. For some reason, a second inventory was made by other appraisers, Jan. 9, 1697, showing a greater valuation of £625. (Collections of the New York Historical Society, Abstracts of Wills, vol. 1, pp. 267-268, 271, 274, recorded on pp. 126, 157, 152 of liber 5-6). The will indicates that he lived on the north side of Staten Island .

Sinnott, p. 155, makes only a brief reference to the family.

Data from a number of sources makes possible the preparation of Jean's family record, altho he may have had other children, of whom no records have been seen. No attempt is made here, to list the children in exact order.

2. Nicholas Crocheron, named in his father's will as the eldest son, married Anne.... according to his will dated Feb. 10 , 1703. The will was proved July 24, 1707, and an inventory made on Sept. 23, 1707, showed a valuation of £475. (Collections of the New York Historical Society, Abstracts of Wills, vol. 1, pp. 445 and 330, recorded on p. 410 of liber 7, and p. 481 of liber 5-5 . The date of the inventory is given in the reference quoted , as Sept. 23, 1701 -obviously an error . Nicholas had no children at

the time he made his will, as he provided that in the event there were no children, then half of his paternal estate was to go to his nephews and nieces, children of John Bodine by his first wife (Maria ?) Crocheron.

3. MARIA CROCHERON. Married Jan. 11, 1680, Jean Bodin , her name appearing in the church records as Crossron. (Marriage records of the Flatbush Church, in the Holland Society Yearbook for 1898, p. 88). She may have been the Maria "Creison" who, with Jan Bodin, witnessed a baptism in the Reformed Dutch Church in New York City, Nov. 3, 1677. (Collections of the New York Genealogical and Biographical Society, vol. 2, p. 130). Her first name is not given in Sinnott's work, but is indicated in Lee's "Genealogical and Memorial History of the State of New Jersey", vol. 4, p. 1358. Information of the probable ancestry of Jean Bodine, and of his descendants is included in the Bodine chapter.

4. Katherine Crocheron. Married Abraham Lakerman, born 1656. (St. Nicholas Society of the City of New York, genealogical record for 1905, p. 102).

5. John Crocheron, born 1658. (Age given as 48 in the Staten Island census for 1706). Married, May 3, 1682, Hester Lucky. The church record gives his name as Jean Crosseron, and his wife's as Lurhey Hester. (Flatbush Church records in the Holland Society Yearbook for 1898, p. 89). His will, proved in 1727, names his second wife as Mary, and children by his first wife as John, (age 21 in 1706), Abraham (age 19 in 1706), Mary and Elizabeth. (Staten Island and Its People, by Leng and Davis, vol. 2, p. 882).

6. Adriana Crocheron, married Isaac (or Jacques) Poulion on Oct. 24, 1677. (Staten Island and Its People, vol. 2, p. 882). A daughter, Maria, was baptized April 27, 1679 in the church at Flatbush. Names of the parents given as Jaques Boulon and Adriana Corilon, and witnesses named as Jan Bodin and Maria Corilon. (See Flatbush Church records in the Holland Society Yearbook for 1898, at page 111). (See Holland Society Yearbook for 1898, p. 87.

7. Styntje Crocheron, married Jacob Gerretse Hoes in 1680 . (Staten Island and Its People, vol. 2, p. 882).

8. Jannetje Crocheron. Married Gerrit Claes Van Vechten , on Sept. 25, 1682, at Flatbush, L. I. (Holland Society Yearbook for 1898, p. 90; and, Somerset County Historical Quarterlies, vol. 6, p. 159). He married second, March, 1693, Magdalena Jans. (Bergen Family, 1876, p. 544).

9. Margaritje Crocheron. Married April [illegible] 13), 1684, Peter Van Neste, Jr. (Flatbush Church records [illegible] Holland Society Yearbook for 1898, p. 91). He married [illegible]ond Styntje Jans. (Somerset County (N. J.) Historical Quarterlies, vol. 6, pp. 159, 212; and Bergen's "Register of the Early Settlers of Kings County, L. I.", p. 347).

10. Abraham Crocheron, mentioned in a will dated December 2, 1702, as a son of Jean. (Collections of the New York Historical Society, vol. 1, p. 357, recorded on p. 75 of liber 7).

11. Anthony Crocheron, mentioned in his father's will.

Miscellaneous records of the family, not applicable to this chapter, have been noted as follows:-

Annals of Staten Island by J. J. Clute, pp. 364-366.

Staten Island and Its People, by Leng and Davis, vol. 2, p. 882 and vol. 3, pp. 298-299.

History of Richmond County, by R. M. Bayles, pp. 520-521.

Table of Contents

Appendix	Title	Page
C	Pels line	xvi
D	Elting line	xxvi
E	Slecht line	xxxiv
F	Van Den Berg line	xl
G	Lansing line	xliii
H	Ten Eyck line	xliv
I	Bogart line	xlvii
J	Rapalje line	l
K	Van Schouw line	liii
L	Bergen line	lv
M	Bodine line	lvi
N	Bridon Family	lxi
~~O~~	~~Gerrit E. Van Wagenen (#70 in the genealogy)~~	~~lxii~~
P	Bibliography for 1946 records	lxv

APPENDIX C

PELS LINE

As near as can be ascertained, Evert Pels and his wife, Jannetje Symens, were the parents of at least nine children. The exact order of their births is not known, only a few having been recorded. It appears likely that all were born in New Netherland. Listing Evert Pels as first generation, his children were:-

2nd. generation:-

2. (.....)Pels, a son. It is a matter of record that he was captured by the Indians in 1659, as a youth, and that he subsequently took an Indian for a wife. They had children, and he refused to leave the Indians. (Doc. v. 13, p. 143). From the fact that he was old enough to have been a member of an armed guard, (mentioned in the earlier part of the Pels chapter), it appears permissible to suggest that he may have been about 16 years of age at the time, which would place his year of birth at 1643, or the year following the arrival of his parents in New Netherland. He was probably the eldest child.

3. Jannetje Pels. She was a witness at a baptism, March 13, 1667 in Kingston. (Hoes, "Register of the Old Dutch Church, Kingston, N. Y.", p. 6, baptism #81). I find no record of her having been married.

4. Evert Evertszen Pels. Born in Albany, according to the record of his marriage. He married, Aug. 13, 1670* Brechtje Elsewaert, in New York City. (Collections of the New York Genealogical and Biographical Society, vol. 1, p. 34). The date of his marriage suggests that he may have been born about 1648. He died before May 30, 1678, when his widow joined the church in New York. (New York Genealogical and Biographical Record, vol. 54, pp. 158-159, and vol. 9, p. 163). Brechtje is recorded as having been a native of Holland. On Oct. 2, 1678 the banns (intention to wed), were published and on Nov. 6, 1678, Brechtje, the then widow of Evert, married Nelle Claessen. (Collections.... vol. 1, p. 44). By that marriage she had one child, and by a subsequent marriage she had three more children. (New York Genealogical and Biographical Record, vol. 54, pp. 158-159) *(This date is given as the date the banns were entered, in Records of N. A. vol. 6, p. 262).

Evert was the owner of second class property valued at about $1000 in 1674, and was a resident on the west side of the present Pearl Street, between Franklin Square and Wall Street, then known as the Smith's Alley. (Valentine's "History of the City of New York", p. 320). From records, it appears that he was builder of boats, and he was named in a suit involving the building of a sloop, Mar. 13 and April 10, 1674. (Records of New Amsterdam, v. 7, pp. 72, 77).

5. CLARA PELS, baptized Sept. 10, 1651 in New Amsterdam. Father's name given, but not the mother's. (Collections of the New York Genealogical and Biographical Society, vol. 2, page 30).

(2nd. generation)
Clara Pels married Gerrit Aertsen (#6 in the Van Wagenen genealogy). The date is not known.

6. Maria Pels. Married Arie Roosa in Kingston. There appears to be no record, however. Arie was born in Holland, the son of Albert Heymans Roosa, who with Evert Pels and Cornelis Barentsen Slecht as magistrates , and the schout (sheriff), comprised the first court of justice in Ulster County in 1661. (New York Genealogical and Biographical Record, vol. 31, pp. 235-237). Arie Roosa was a partner with Jan Elting (see Elting chapter)and Gerrit Aertsen, in the purchase of land from the Indians in Dutchess County in 1686. This was described in the 1942 Van Wagnen record and in the genealogy of 1884. Maria Pels may have been born about 1655. Arie Roosa was 17 years of age in 1660. (New York Genealogical and Biographical Record, vol. 69, p. 309).

7. Elizabeth Pels. Married in 1676 , Jochem Englebert (Van Namen), in Kingston. (Hoes' "Register of the Old Dutch Church at Kingston", p. 503, marriage #33). Riker, in his "Harlem, its Origin and Early Annals", p. 339 , and in his "Revised History of Harlem", p. 303, gives the date as Nov. 3, 1675. The Kingston record gives only the year. Elizabeth may have been born about 1657.

8. Sara Pels. Her birth is not recorded. However, in preparing the 1884 genealogy, the compiler of that record had access to a copy made from the family Bible of her husband , Jacob Aertsen (Van Wagenen), in which her birth date was given as July 3, 1659. They were married, according to an entry in the same Bible, Feb. 25, 1677. Jacob's birth date is given as Feb. 14, 1652, old style in the Bible. He was a brother of Gerrit Aertsen (#6), husband of Sara's sister, Clara Pels.

9. Rebecca Pels. Baptised Nov. 13, 1661 at Kingston. (Hoes' "Register....", p. 2, baptism # 10). Her mother's name is given as Jannetje Symens. I find no record of Rebecca having married .

10. Symen Pels. Baptised Mar. 29, 1665 at Kingston. (Hoes' "Register.... , p. 4, baptism # 55). He married, Jan. 1, 1683 at Kingston, Maritje Hendrix. (Hoes' "Register...", p. 506, marriage #58).

3rd. generation:-

Children of Evert Pels (#4) and his wife Brechtje Elsevaert, all baptized in New York City, copies of baptisms being included in the "Collections of the New York Genealogical and Biographical Society", vol. 2, at pages noted. A list of their children also appears in the New York Genealogical and Biographical Record, v. 64, pp. 158-159.

11. Annetje Pels, bp. Aug. 11, 167'. (P. 102). Married, June 26, 1691, Johannes (Janszen) Van Rommen, in New York City. (p. 70 of vol. 1 of the "Collections..". A record of their children is included in the New York Genealogical and Biographical Record, v. 64, pp. 334-335, and is evidenced by vol. 2 of the "Collections", pages noted as follows:-

4th. generation:-

a. Evert Van Rommen, bp. Sept. 9, 1691. (p. 204). Died young.

b. Jan Rommen, bp. Dec. 4, 1692. (p. 211). Evert Pels, brother of Annetje, was a witness. Jan died young.

c. Evert Rommen, bp. Jan. 20; 1695. (p. 223).

d. Aernout Rommen, bp. Feb. 21, 1697. (p. 242). Married Susanna Bradt.

e. Petrus Rommen, bp. May 18, 1699. Stoffel Pels (#13), brother of Annetje, was a witness. (p. 258).

From here on, the father's name appears as Johannes Langestraedt.

f. Bregje, bp. Aug. 4, 1700. (p. 268).

g. Johannes, bp. Jan. 5, 1703. (p. 288).

h. Marytje, bp. Sept. 16, 1705. (p. 311). Theophilus, (Crystoffel, #13), Annetje's brother, was a witness.

i. Geertruy, bp. Oct. 5, 1707. (p. 326).

From here on the father's name appears again as Van Rommen.

j. Evert, bp. Jan. 4 1710. (p. 342).

k. Annetje, bp. Nov. 16, 1712. (p. 364).

3rd. generation:-

Children of Evert Pels (#4), continued:-

12. Evert Pels, bp. Oct. 22, 1673. (p. 111). Married, Sept. 29, 1695, Margareta (Melcherts) Van Deusen. (Collections...v. 1, p. 80; and Van Deusen Genealogy, vol. 1, p. 15). Date given as Aug. 31 in the New York Genealogical and Biographical Record, v. 30, p. 102 is an error, as it was the date of publication of the "banns" (intentions to marry). His wife was born about 1675, and died before Oct. 9, 1720, when Evert married, in New York, Annatje Van Schaick. (Collections.... vol. 1, p. 133). Records of this family are included in the New York Genealogical and Biographical Record, vol. 30, pp. 156-157; and in the Van Deusen Genealogy, v. 1, pp. 39-40, and are evidenced by copies of the original baptismal records as follows:-

4th. generation:-

a. Breechje, bp. June 7, 1696 in Albany. Died young.

b. Evert, bp. June 7, 1696 in Albany. Twin with Breechje. (Albany Church records in the Holland Society Yearbook for 1904, p. 71). Evert died young.

From here on, all the baptisms were in New York City.

c. Bregje, bp. July 25, 1697. Died young.

d. Engletje, bp. July 25, 1697. Twin with Bregje. (See Collections..... vol. 2, p. 246). Staffel Pels (#13), and Anna Pels (#11), brother and sister of Evert (#12), witnesses. Engltje married, Dec. 7, 1717, Jacob Kip. (Collections..., vol. 1, p. 128). A full record of their family appears in Frederic Ellsworth Kip's "Kip Family in America", p. 340; and a partial record is included in the New York Genealogical and Biographical Record, vol. 8, p. 131. Baptismal records of the children appear on pp. 425, 459, 476 of vol. 2; and pp. 26, 62, of vol. 3 of the "Collections...".

5th. generation:-

A. Margrietje, bp. Feb. 24, 1721.

B. Isaac, bp. July 25, 172[illegible]

C. Sara, bp. July 23, 1727.

D. Betje, bp. Mar. 18, 1733

E. Evert, bp. Jan. 11, 1738.

4th. generation:-

Children of Evert Pels (#12), continued:-

e. Breegje, bp. Feb. 4, 1700. (Collections.v.2.p. 265). She may have been the one who married Raphael Coelet April 17, 1720. (Collections ... v. 1, p. 133).

f. Rachel, bp. Mar. 29, 1702. (Collections.v.2,p. 282). Died after 1709 and before 1711, as Valentine, in his History of New York, pp. 357, lists Evert Pels,his wife and three children as residents of the city in 1703 , and another daughter, also named Rachel, was born 1711.

g. Evert, bp. July 2, 1704. (Collections..v. 2, p. 299) Anna Pels (#11) and Christoffel Pels (#13), sister and brother of the father, were witnesses. Evert may possibly have been the one who married Elizabeth Perot, on May 31, 1751. (Collections....v. 1, p. 184). There was an Evert who died in 1761, who may have been this one . (New York Genealogical and Biographical Record, vol. 57 p. 235).

h. Annetje, bp. Aug. 25, 1706. (Collections ...vol. 2 , p. 317). Died young.

i. Abraham, bp. Mar. 28, 1708. (Collections....vol. 2 , p. 330). Married, Aug. 25, 1733, Magdalena Appel. (See Collections.....vol. 1, p. 170).

j. Rachel, bp. Dec. 9, 1711. (Collections... vol. 2, p. 356). She married, Oct. 7, 1732, Abraham Van Deusen . (Collections.... vol. 1, p. 155).

k. Annetje, bp. April 17, 1715. (Collections.. vol. 2 , p. 382). She may have been the one who married, Jan. 13 1734, William Bogart, Jr. (Collections... vol. 1, page 157).

3rd. generation:-

Children of Evert Pels (#4), continued:-

13. Crystoffel Pels, bp. April 11, 1676. (p. 122). He was also known as Theophilus. Married, Nov. 28, 1697, in New York, Catalyntje Bentinck (Bensing). (Collections.... vol. 1, p. 86). She died before October 18, 1707 when Crystoffel married Elizabeth Baracolo. (Collections.... vol. 1, p. 100). She was the daughter of Gerrit Hendrickse Blauvelt, and widow of Daniel Barkelo. Crystoffel's will, naming him as Theophilus Pell, rope maker of New York, was made Oct. 27, 1724 and proved Jan. 10, 1726. Names his eldest son Samson, also Evert and daughters Breghtje, and Mary. Names his wife as Elizabeth. (New York Historical Society, vol. 2 of Abstracts of Wills, p. 308). Records of their children are evidenced by the baptismal records appearing in the "Collections of the New York Genealogical and Biographical Society", vol. 2, pages as noted. (All children born in New York).

4th. generation:-
First marriage.

a. Bregie, bp. Feb. 12, 1699. (p. 256). Evert Pels #10, a brother of Crystoffel, was a witness. Bregie may have been the one who married on April 17, 1720 Raphael Goelet. (Collections.... vol. 1, p. 133).

b. Samson Pels, bp. July 21, 1700. (p. 268). Married, Jan. 22, 1725, Maria Bensing (Collections... vol. 1, p. 142). Their children evidenced by the "Collections...", volumes and pages as noted, were:-

5th. generation:-

A. Catalyntje, bp. Dec. 5, 1725. (Vol. 2, p. 462).

B. Maria, bp. Feb. 2[illegible], 1728. (vol. 2, p. 481).

C. Catalyntje, bp. Feb. 1, 1730. (vol. 2, p. 496).

D. Maria, bp. Nov. 29, 1732. (vol. 3, p. 24). m. Jeremiah Fowler. (v. 68, p. 245; v. 71, p. 67: G.&B. Rec.)
E. Bregje, bp. Feb. 5, 1735. (vol. 3, p. 40).

c. Evert Pels, bp. April 26, 1702. (p. 283).

d. Evert Pels, bp. Feb. 6, 1704. (p. 297). Married, on Feb. 14, 1725, Catharina De Grauw. (Collections, vol. 1 p. 143). He may have been the Evert who died in 1761. (New York Genealogical and Biographical Record, vol. 57 p. 235). Baptisms of their children are evidenced by entries in the "Collections.....", vol. 2, pages noted.

5th. generation:-

Children of Evert Pels and Catharina De Grauw:-

A. Dorathea Pels, bp. Feb. 19, 1727. (p. 473).

B. Dorathea Pels, bp. Mar. 20, 1728. (p. 482).

C. Catalyntje Pels, bp. April 15, 1730. (p. 498). Samson Pels, brother of Evert, was a witness.

4th. generation:-

Children of Crystoffel Pels (#13), continued:-

e. Theophilus Pels, bp. Mar. 18, 1705. (p. 306).

From here on, the children are by the second marriage:-

f. Bregje, bp. Sept. 3, 1708. (p. 332). May be the Brigitta Pell who married, Oct. 25, 1730, John Taveau. (Collections.... vol. 1, p. 152).

g. Maria, bp. Oct. 8, 1710. (p. 348). May be the Maria Pell who married, Dec. 11, 1735, Daniel Waldron, (see Collections...., vol. 1, p. 159), or the Maria Pel who married, April 6, 1729, Jacob de la Montagne, (Collections, vol. 1, p. 149) and had Abraham bp. April 29th., 1730. (Collections, vol. 2, p. 498).

h. Daniel, bp. July 12, 1713. (p. 368). Evert Pels, #12 was a witness.

i. Catalyntje, bp. July 12, 1713. (p. 368). Twin with Daniel. Died young.

j. Catalyntje, bp. Dec. 25, 1714. (p. 379). May be the Catharine Pell who married, Dec. 10, 1736, Jacob Write, (Collections...., vol. 1, p. 160), or the Catalina Pells who married, July 8, 1753, Isaac Fardon. (Collections., vol. 1, p. 187).

k. Johannes, bp. May 26, 1717. (p. 397).

3rd. generation:-

Children of CLARA PELS (#5) and Gerrit Aertsen. Ten in number, they are listed in the 1884 Van Wagenen genealogy, and are numbered from #32 to #41, inclusive, for those records. Descendants of one of them, Aert Gerritsen (Van Wagenen), #32 , are recorded in the 1884 genealogy, and one line descending from Aert through the year 1942, is recorded in the record published that year. Inasmuch as a listing of Clara Pels' children would be, at best, a repetition of data already compiled and published, it has been deemed sufficient to list in this appendix, only the numbers which have been assigned them for purposes of continuity in the Pels family records. All born in Kingston, the ten children have been assigned the following numbers:-

<u>14 to 23</u>, inclusive.

3rd. generation:-

Children of Maria Pels (#6) and Aris Roosa.
A detailed record of their children is included in the New York Genealogical and Biographical Record, vol. 31, pp. 235, 237, based on church records evidenced by Hoes' " Register of the Old Dutch Church, Kingston, N. Y.". A statement on page 236 , that "the mother of Maria Pels was Jannetje Symens and the record of their marriage is on pages 2 and 4 of the Register," is an error, as the records on those pages are for the baptisms of Rebecca Pels and Symen Pels, respectively, they having been the children of Evert Pels (#1) and Jannetje Symens.

The New York Genealogical and Biographical Record, vol. 69 , p. 309 also includes data of Maria's children. A daughter, Jannetje Roosa married Jan Van Etten (bp. Jan. 3, 1656). She died before June 22, 1731, when Jan married Cornelia Van Aken. (Hoes, p. 560, marriage #717). Jannetje Roosa had ten children, records of whose baptisms appear in the Kingston register, and a further account of her descendants is given in the New York Genealogical and Biographical Record, vol. 30, pp. 52-54; 183-184; 229-230.

It is deemed sufficient to list in this appendix, only the numbers which have been assigned Maria Pels' children, in order to maintain continuity in the Pels family records. All born and baptized at Kingston, the seven children have been numbered:-

<u>24 to 30</u>, inclusive.

3rd. generation:-

Children of Sara Pels (#8) and Jacob Aertsen. Fifteen in number, they are listed in the 1884 Van Wagenen genealogy where they are numbered from #17 to #31 inclusive. They are also listed in the New York Genealogical and Biographical Record, vols. 21, 22 , and 23. Of the fifteen children, six were daughters and nine were sons. One son, Jacob, was born in Albany , the rest in Kingston . For the purpose of continuity in the Pels family records, these children have been numbered:-
<u>41 to 55</u>, inclusive.

3rd. generation:-

Children of Elizabeth Pels (#7) and Jochem Van Namen , all baptized in Kingston as evidenced by Hoes' "Register of the Old Dutch Church at Kingston, N. Y.", pages as noted:-

31. Delejaentje, bp. Sept. 15, 1678. (p. 10, bp. #147). Name of her mother given as Sara Evertsen. This evidently is an error, as Sara Evertsen was a sister of Elizabeth. Delejaentje married, at Kingston, Mar. 16, 1702, Barent Marteling of Staten Island . (p. 518, marriage #189).

32. Johannes, bp. Oct. 8, 1682. (p. 17, bp. #283). Simon Pels (#10), brother of Elizabeth, was a witness. Johannes died young .

33. Evert, bp. Sept. 2, 1683. (p. 19, bp. #321). Witnesses were Evert Pels and Jannetje Symens, parents of Elizabeth.

34. Englebert, bp. Jan. 10, 1686. (p. 25, bp. #442). Gerrit Aertsen and Clara Pels (#5), brother-in-law and sister of Elizabeth, were witnesses.

35. Annetje, bp. Nov. 6, 1687. (p. 29, bp. #534). Witnesses were Symen Pels and Sara Pels, brother and sister of Elizabeth. Annetje died young. -

No births are recorded for a period of six years, until:-

36. Johannes, bp. April 23, 1693. (p. 39, bp. #741). Cornelis Masten and Lysbeth Aertsen were witnesses. The latter was a sister-in-law of Clara and Sara Pels, sisters of Elizabeth Pels.

37. Anna, bp. June 7, 1694. (p. 44, bp. #844). Jacob Aertsen and his wife Sara Pels, sister of Elizabeth, were witnesses.

38. Sara, bp. July 4, 1697. (p. 5 bp. #97[illegible] .

39. Jenneke, bp. Mar. 17, 1700. (p. 58, bp. #1160).

40. Marytje, bp. Mar. 22, 1702. (p. 64, bp. #1298).

Riker, in his "Harlem, its Origin and Early Annals", p. 339, and in his "Revised History of Harlem", p. 303, lists only five children, namely, Deliantje (with notation of her marriage to Marteling), Evert, Englebert, Johannes and Anna (with a notation of her marriage to Isaac Marteling).

- - - - - - - - - - - - - -

The following persons have not been identified in these records:-

Elizabeth Pell married Matheus Slecht, Jan. 7, 1744; Elizabeth Pell married William Lindsay, Oct 1, 1753; Maritje Pels , married Jeremiah Fowler, Feb. 24, 1760 (see p. xxi); Evert Pels, married July 17, 1760, Sara Smith. (Collections of the New York Genealogical and Biographical Society, vol. 1, pp. 171, 214, 203, 205).

- - - - - - - - - - - - - -

3rd. generation:-

Children of Symen Pels (#10) and Maritje Hendrix , all baptized in Kingston as evidenced by Hoes' "Register of the Old Dutch Church at Kingston, N. Y.", pages as noted:-

56. Evert Pels, bp. Oct. 19, 1684. (p. 23, bp. #393). Jannetje Symens, mother of Symen, was a witness.

57. Hendrick Pels, bp. Aug. 29, 1686. (p. 26, bp. #479). Symen's brother-in-law, Gerrit Aertsen, and sister, Clara Pels, were witnesses. Hendrick married Sophia Parmetier, and had:-

4th. generation:-

a. Maritje, bp. Sept. 11, 1709, in Kingston. (See Hoes' Register.... p. 85, bp. #1752).

b. Michiel, bp. Nov. 13, 1710 in New York City. (vol. 2 p. 349 of the Collections of the New York Genealogical and Biographical Society).

c. Symen Pels, bp. Aug. 16, 1713 at Kingston. (See Hoes' Register.... p. 103, bp. #2151).

d. Hendrik Pels, bp. Feb. 8, 1716 in Poughkeepsie. (See Hoes' "Register....", p. 113, bp. #2378). He married, in December, 1742, Jannetje Osteroom. (Edmund Platt's "The Eagle's History of Poughkeepsie", p. 30).

58. Johannes, bp. Jan. 5, 1689. (p. 32, bp. #603). Parents named as Symon Pels and Marye Aertsen. This would appear to indicate that Symen had married a second time, or that there was an error in entering his wife's name as Aertsen instead of Hendrix . Evert Pels and Sara Pels, brother and sister of Symen, were witnesses.

- - - - - - - - - - - - -

Miscellaneous records of the Pels family have been noted in various sources, among them being the following:-

B. M. Brink's "Olde Ulster", vol. 5, pp. 358-359; and Hudson Mohawk Genealogical Memoirs", vol. 4, pp. xxvii, xxviii-xxix, include data which duplicates, in general, the information found in the Van Rensselaer-Bowier Manuscripts relative to Evert Pels (#1)

The Eagle's History of Poughkeepsie, N. Y., by Edmund Platt, pp. 21, 30, 33, 67, 70, 74-78, 86.

Biographical Record of Dutchess County, N. Y. by J. H. Beers and Co., pp. 678-679.

Information of other later generations of the family can be obtained from church records of Ulster and Dutchess Counties, and from abstracts of wills on file in those counties. (See "Calendar of Wills on file at Albany, N. Y.").

APPENDIX D

ELTING LINE

The following chart shows the extent of the Elting family records as they appear in "Olde Ulster", vol. 3.

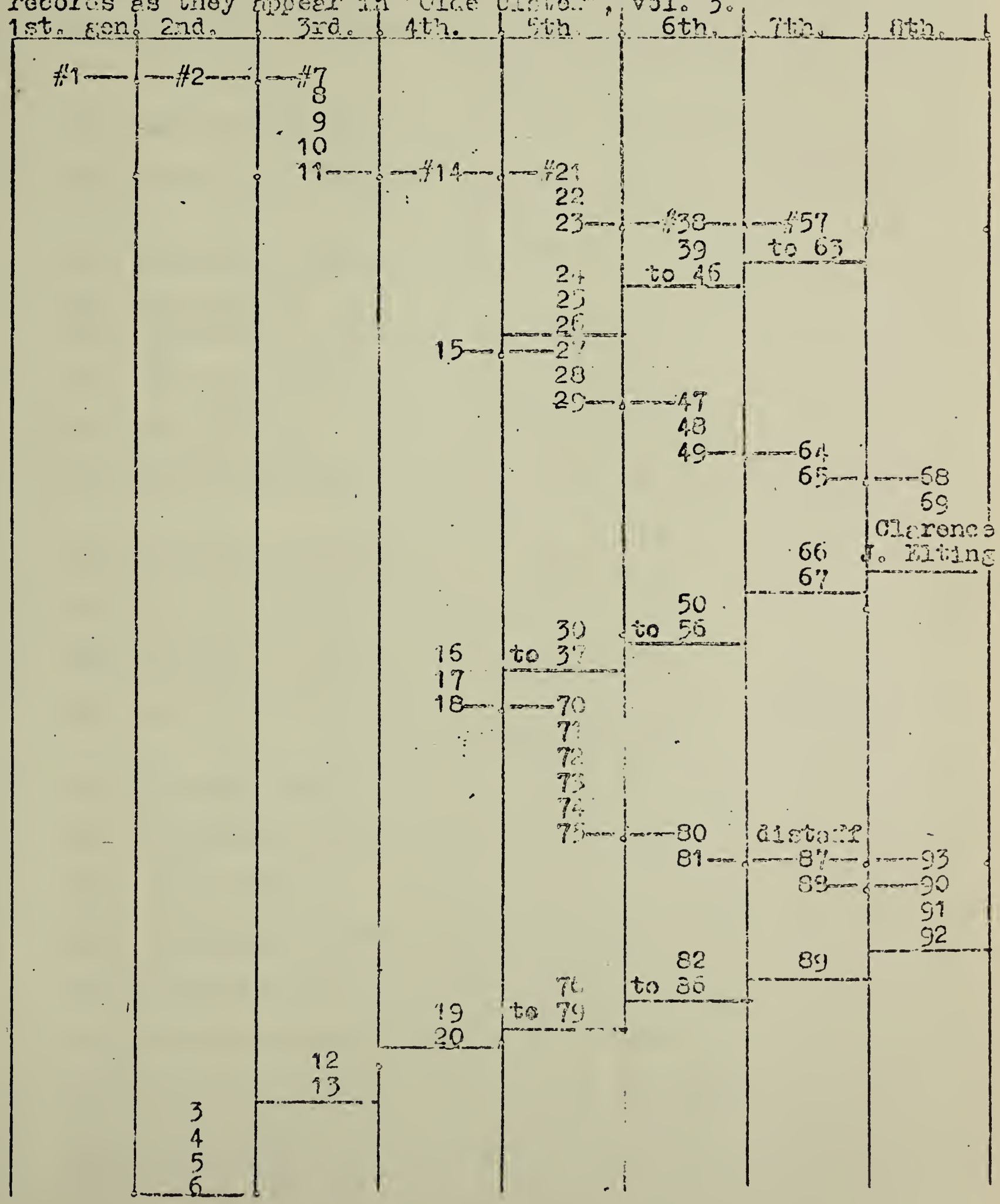

4th. generation:-

#14. Abraham Elting.- - - -pp. 99, 100, 128, 149, 150, 151, 168, 311, 487, 494, 496.

#15. Roelif J. Elting.- - -pp. 99, 100, 128, 149, 151 , 168, 278, 443, 469, 487, 491, 492, 493 494, 496.

#17. Solomon Elting. - - - pp. 149, 169, 487.

#18. Cornelius Elting. - - pp. 149, 151, 168, 233, 250, 251, 487, 496.

#19. Catherine Elting. - - p. 487.

5th. generation:-

#21. Josiah Elting.- - - - pp. 204, 494.

#22. Henricus Elting.- - - pp. 494, 496.

#23. Noah Elting. - - - - pp. 494, 496.

#24. Philip Elting.- - - - pp. 129, 201, 204, 487, 491, 494, 496.

#25. Magdalena Elting. - - p. 492.

#26. Jacobus Elting. - - - p. 494.

#28. Josiah R. Elting. - - pp. 426, 491.

#29. Ezekiel Elting. - - - pp. 128, 129, 200, 201, 204, 421, 491, 492, 494.

#30. Solomon Elting. - - - pp. 426, 491, 492.

#31. Magdalena Elting. - - pp. 443, 447, 491, 493.

#32. Sarah Elting. - - - - pp. 278, 491, 493.

#33. Catherine Elting. - - pp. 491, 493, 496.

#34. Jane Elting.- - - - - p. 373.

#35. Johannes(John)Elting. pp. 491, 492.

#36. Roelif Elting.- - - - pp. 421, 491, 492.

#37. Maria Elting. - - - - pp. 491, 493.

6th. generation:-

#38. Abraham Elting. - - - p. 496.

#40. Henry D. Elting.- - - p. 496.

6th. generation, (cont.):-
#41. Joseph Elting.- - - - p. 496.

#43. Philip Elting.- - - - pp. 270, 496.

#44. David Elting. - - - - p. 496.

#47. Dinah Elting. - - - - p. 492.

#48. Catryntie Elting. - - p. 492. (In list of children , on that page, her name is omitted . She died young).

#49. Solomon Elting. - - - pp. 202, 492.

#50. Maria Elting. - - - - p. 492.

#51. Sarah Elting. - - - - p. 492.

#52. Catherine Elting. - - pp. 271, 492.

#53. Jacob Elting. - - - - pp. 421, 492.

#54. Jane Elting.- - - - - p. 492. (Her name has also been omitted on this page. She died young).

#55 Alexander Elting.- - - pp. 301, 304, 492.

#56. Jane Elting.- - - - - p. 492.
7th. generation:-
#60. Luther Elting.- - - - p. 496.

#64. Abraham V. N. Elting- pp. 202, 492.
5th. generation:-
#71. Wilhelmus Elting. - - p. 497.

#73. Jane Elting.- - - - - p. 497.

#74. Maria Elting. - - - - pp. 233, 250, 251.

#75. Solomon Elting. - - - p. 497.

#76. Blandina Elting.- - - p. 497.

#78. Cornelius C. Elting.- pp. 25[illegible], 497.

#79. Catherine Elting. - - p. 497.

Frequent mention is made in "History of New Paltz" of Philip Elting #24, and Ezekiel Elting #29 having been "double brother-in-laws, a relationship which is explained as follows:-

Josiah Elting #11 had sons:

Abraham Elting #14	and	Roelif J. Elting #15
who had		who had
Magdalena #25 and Philip #24		Catherine #33 and Ezekiel #29

Philip married Catherine; Ezekiel married Magdalena. Therefore each became a double brother-in-law of the other, having already been first cousins as well.

Descendants of some of the persons in the preceeding tabulation are not recorded in "Olde Ulster". However, many of them are mentioned in "History of New Paltz" as indicated in the following tabulation, which shows the number and name of each individual as it appears in "Olde Ulster", with the names of the descendants as they appear in "History of New Paltz", the page numbers referring to the latter volume.

2nd. generation:-
#4. Willem Elting. His daughter, Jacomyntje referred to on page 485, and a son, Jan, on page 518.

3rd. generation:-
#7. John Elting. Had sons Peter, Roelif, 4th. generation. (p. 484).

#8. Jacomyntje Elting. Married Willem Kotteback. (Page 484). Her children, 4th. generation, are recorded at pp.149-150 of vol. 27 of the N. Y. Gen. and Biog. Record , from the records of the Dutch Church at Machackemeck (Deer Park), as contained in vol. 42 of the Record.

#9. Abraham Elting. Had Roelif, 4th. gen. (p. 484) .

#12. Margaret Elting. Married Abraham Bevier. (pp. 98, 484). Had 9 children, 4th. generation, including Abraham Bevier. (p. 244).

#13. Noah Elting. Had daughter, Sara (p. 151), 4th. generation, who married Dirck Wyncoop (pp. 485-486). They had (1), Gertrude Wyncoop, 5th. generation, who married 1st. Alexander Colden and 2nd. David Colden, (p. 486); and (2), Cornelia Wyncoop, 5th. generation, who married Peter Elting, (probably the Peter referred to on page 133), and had Edmund Elting, 6th. generation. (pp. 132, 209, 486). Edmund is referred to on pp. 61, 100, 290, 314, 383, 483, 485, 486).Peter was a son of Willem Elting, 4th. generation, who was a grandson of Willem Elting #4, 2nd. generation. (p. 436) .

4th. generation:-
#14. Abraham Elting. Listed as having two daughters, 5th. generation, Jane and Margaret (p. 494). "Olde Ulster", lists only one, named Magdalena.

#17. Solomon Elting. No children. (p. 487).

5th. generation:-

#21. Josiah Elting. Had children, 6th. generation, as follows:- Dina who married Roelif Elting #36; Richard , and Cornelis, (p. 494); Abraham J. (pp. 204 and 494); Charles, a twin of Abraham J., (pp. 205, 248, 494). Charles referred to on page 375. Abraham J. married Jane Bevier (p. 248) and had Edgar and Norman, 7th. generation. (p. 494). Charles married Magdalena Bevier, (pp. 248, 494). They had a grandson, Watson Elting, 8th. generation. (pp. 205, 494).

#24. Philip Elting. Had son Methusalem, 6th. generation (p. 487) who married Magdalena LeFevre (p. 431) and had a son Solomon L. F. Elting, 7th. generation. (pp. 487, 496). He is mentioned on page 100. Philip also had Moses, Jesse , Maria, Rebecca, Dirck, Magdalena, Gertrude, 6th. generation, (p. 487). Maria married Abraham P. LeFevre (p. 432) ; Magdalena married Andries P. LeFevre, (p. 432). Listed on p. 494 is a grandson, Jesse M. Elting, 7th. generation, who is also referred to on pp. 129, 201, 489, 492.

#28. Josiah Elting. Had Andries, Roelif, Abraham D.B. Maria, Rachel, Cornelia, Magdalena, Gitty, 6th. generation . Maria married 1st, Dr. John Bogardus, and 2nd. Abraham P.LeFevre; Rachel married Ralph LeFevre; Cornelia married Peter Deyo (p. 271); Magdalena married Derrick W. Elting; Gitty married Cornelis LeFevre. A grandson of Josiah, Philip LeF . Elting, 7th. generation is mentioned. (Preceeding data is on page 491 unless noted otherwise).

#29. Ezekiel Elting. Jesse Elting listed as a grandson 7th. generation, (p. 201).

#30. Solomon Elting. Had Roelif, David, Tobias, Solomon, and 7 daughters, 6th. generation. (p. 492).

#31. Magdalena Elting. Married Peter LeFevre, had Moses P., Magdalena, Josiah P., and 6 other children, 6th. generation. (p. 493).

#32. Sarah Elting. Married William Deyo. They had 6 daughters, (p. 493), Maria, Jane, Sarah, Bridget, Rebecca , Catherine, (p. 278), and sons William W., Roelif, Ezekiel , Cornelis, Abraham W., 6th. generation. (pp. 278, 493).

#33. Catherine Elting. Married Philip Elting #24. They had 7 children, 6th. generation (p. 493), 8 children are referred to on page 487. (See under #24, preceeding).

#35. Johannes Elting. Had George and 4 daughters, 6th. generation. George had John, 7th. generation. (p. 492).

#36. Roelif Elting. Married Dirck Elting. Had Daniel, Ezekiel, Brodhead, 6th. generation. (pp. 199, 493). Ezekiel had Jacob, 7th. generation (p. 200). One other son and five daughters , 6th. generation, are mentioned on page 492. One daughter, Catherine, probably married....LeFevre.

5th. generation, cont.:-
#37. Maria Elting. Married Garret DuBois. Had Henry Jacob G., Roelif, Solomon, Catherine, Rebecca, Maria, 6th. generation. Jacob G. had Philip and Solomon, 7th. generation. (p. 493).

#71. Wilhelmus Elting. Had Maria, 6th. generation, who married Cornelis Van Winkle; Jane who married Augustus Hasbrouck (p. 387); and Cornelis who married Catherine Hardenburgh. (p. 497).

#74. Maria Elting. Married Louis Bevier. Her children, 6th. generation, are listed at pp. 251-252.

The identities of a few individuals mentioned in "History of New Paltz", remain obscure as to lineage, as they are not listed in "Olde Ulster", nor are there any clues as to whom they are related. Their names and the pages in "History of New Paltz", on which they appear, follow:-

Page 199. Philip D. Elting.

Page 268. Elizabeth Elting married Daniel Deyo.

Page 271. Catherine Elting married Andries Deyo.
Andries Elting married Catherine Deyo.

Page 277. Josiah Elting married Emily Deyo,

Page 278. (.....)Elting, daughter of John Elting, married Thomas Deyo.

Page 421. Roelif S. Elting married Catherine LeFevre.

Page 428. Roelif Elting married Blandina LeFevre.

Page 492. Philip D. Elting.

Miscellaneous records of the Elting family are included in the following sources:-

Biographical Record of Ulster County, by J. H. Beers and Co. Published in 1896, Pages 47-48; 69-71; 72; 75; 195; 387; 416-419; 517-518; 766-767; 870-871; 919-920; 931; 967; 968; 1073; 1212-1213; 1234; 1245.

Genealogical and Family History of Southern New York and Hudson River Valley, by Tyler Reynolds, Vol. 3, pp. 1029-1032. This includes early records of the family similar to the compilation by Mr. Gerrit Hubert Van Wagenen, carries through one line from Roelif Elting, son of Jan (#1.

History of Ulster County, N. Y., by Nathaniel Bartlett Sylvester, Part 2, pp. 7-8; 13; 23; 24; an un-numbered page facing p. 130; 133-135; 139; 140; and Part 1, pp. 13-16.

History of the Kip Family In America, by Frederic Ellsworth Kip, pp. 327-333.

New York Genealogical and Biographical Record, vol. 21, page 46 includes miscellaneous records relative to the Elting branches in Frederick County, Maryland, and vol. 27, pp. 148-152 includes miscellaneous collateral records in the Elting family.

Recollections of a Grandfather, by Victor Elting, 1940. This work has not been reviewed by the writer.

APPENDIX E

SLECHT LINE

From the joint will made by him and his first wife, (Anjou vol. 1, pp. 32-33, and Sylvester's "History of Ulster County, N. Y.", Part 1, p. 47), Slecht's children by his first marriage can be listed, it being assumed that the order in which they appear in the will, represents the order of their births.

2. JACOMYNTJE SLECHT. Information of her appears in the main part of this volume, in the chapter on the Slecht family.

3. Hendrick Cornelissen Slecht. Married, Aug. 8, 1656, Elsjen Barens of Amsterdam, Holland. He is listed as a wheelwright, from Woerden, Holland. (Hoes' "Register of the Old Dutch Church, Kingston, N. Y.", p. 502, marriage #19). He took the oath of allegiance to the English crown, in Kings County, L. I., in 1687, when he was listed as having been a resident for 35 years, thus setting the time of his arrival in New Netherland as 1652. (O'Callaghan's "Documentary History of the State of New York", vol. 1, p. 430 of the 4to. edition of 1850 and page 659 of the 8vo. edition of 1849. He and his wife are listed as residents of the "dorp" (village) in Brooklyn in 1685. (Stiles' "History of Brooklyn", vol. 1, p. 428). That he was a son of Cornelis Barentsen Slecht is evidenced by a Kingston Court record dated October 9, 1663, which definitely refers to him as such. (Dutch Records of Kingston, in the New York State Historical Association Proceedings, vol. 11, p. 75). He was received into the church at Kingston, June 24, 1661. (Sylvester's "History of Ulster County", Part 1, p. 62). Full name of his wife was Elsje Barens Lievelling. A record of his family appears in Bergen's "Register of the Early Settlers of Kings County, L. I.", pp. 263-264, and in the New York Genealogical and Biographical Record, vol. 47, p. 170. He was probably the Hendrick Slecht who was a witness to a deed, (dated June 11, 1697), of lands from Jacobus-van de Water and his wife, Engletje, of Brooklyn, to Cornelis Slecht and Johanna van deWater, his wife, of the same place. (New York Genealogical and Biographical Record, vol. 54, p. 310). Cornelis was evidently Hendrick's son. Hendrick made his first will Nov. 15, 1677, in which three children are mentioned. (Anjou's "Ulster County Probate.... Records", vol. 1, p. 190)., and a later will dated Sept. 23, 1690 mentions five children. (New York Genealogical and Biographical Record, vol. 47, p. 170). Sons were Barent, the eldest, Cornelis, Abraham and Johannes. One daughter, Anna Catherine, baptized July 12, 1685.

4. Annetje Cornelissen Slecht. Her name appears as a witness at baptisms in Kingston. (Hoes' "Register of the Old Dutch Church at Kingston, N. Y.", pp. 11, [illegible]). She m[illegible] Cornelis Hoogeboom. Their joint will, dated Aug. 1, (probabl[illegible] 1676), is included in Anjou's "Ulster County Probate Records", [illegible]l. 1, p. 33. They removed to Fort Orange about 1663, accordin[illegible] to a notation in Sylvester's "History of Ulster County, N. Y.", p. 63. Annetje was

evidently deceased before Sept. 26, 1684, when her father and his second wife made a joint will which did not include Annetje in a list of his children who were to share in his estate upon his demise. (Anjou, vol. 1, p. 191).

5. Mattys Cornelissen Slecht (incorrectly named by Sylvester as Aalstjem Barents Mattys). Married Maria Maddaleen Creupel (or Crispell). She was born Feb. 15, 1662, the daughter of Anthoine Creupel and Maria Blansham. (LeFevre's "History of New Paltz, New York, p. 524).

Mattys and Maria were the parents of nine children, all baptized in Kingston, and a list of whom appears in the New York Genealogical and Biographical Record, vol. 21, pp. 83-85. The baptismal records, as evidenced by Hoes in his "Register of the Old Dutch Church at Kingston, N. Y.", are as follows:

a. Maria Maddaleen, bp. Aug. 28, 1681. (p. 14, baptism #231).

b. Tryntje, bp. Jan. 27, 1684. (p. 21, baptism # 346). Married, Mar. 5, 1704, Mathys Mathysen (Van Keuren) . (Hoes, p. 521, marriage #222).

c. Matys Slecht, bp. June 13, 1686. (p. 26, baptism #473). Married, about 1710, Catalyntjen Kip, probably in Kingston. A record of their children appears in the volume "Kip Family in America", by Frederic Ellsworth Kip, at pp. 331-333, evidenced by Hoes' "Register.." as follows:

A. Matheus Slecht, bp. April 29, 1711. (page 94 , baptism #1940). He was in Rhinebeck, Dutchess County, N. Y., in 1755. (Morse's "Historic Old Rhinebeck", p. 423).

B. Anna Slecht, bp. Oct. 12, 1712. (page 100, baptism #2076). A record of her descendants appears in the Kip volume, pp. 332-333, her husband having been Tennis van Benschhoten.

C. Henricus Slecht, bp. Nov. 15, 1713. (page 104 , baptism #2177). Died young.

D. Maria Slecht, bp. Jul, 2 1715. (p. 111 , baptism #2320). Died young.

E. Hendricus Slecht, bp. Jun . 1717. (page 119 , baptism #2503. Married, Nov. 1741, Rachel Janse. (Hoes, p. 582, marriage #955). Church record refers to him as Hendrik Slecht, Jr. Place of birth and residence given as Dutchess County. He was living there in 1755. Brink's "Olde Ulster", v. 7, p. 34, identifies him as the Hendrik who married Sara Kierstede, and as the nephew of Jacomyntje Slecht, adding that he was fourth in line from the

founder of the family in America, Cornelis Barentsen Slecht. The latter statement is correct , but renders impossible the statement that Hendrik was a nephew of Jacomyntje, who was the aunt of Hendrik's father instead. This Hendrik has probably been confused with his uncle Henricus, whose record appears later under (i).

F. Maria Slecht, bp. Oct. 16, 1720. (p. 133 , baptism #2817). Probably the Maria who married, Dec. 1, 1739, Moses Vanteyn, Jr. (Hoes, p. 578, marriage #914). The place of her birth and residence given as Dutchess County, which does not preclude the possibility that she was the Maria baptized in the Kingston Church, in Ulster County.

G. Johannes Slecht, bp. April 26, 1724. (page 150, bp. #3213).

H. Cornelis Slecht, bp. April 23, 1727. (page 168, baptism #3599).

I. Tryntjen Slecht, bp. June 15, 1729. (page 181, baptism #3896).

Children of Mattys Slecht (#5) cont.:
d. Cornelius Slecht, bp. Sept. 9, 1688. (p. 32, baptism #587). Died Young.

e. Antoni Slecht, bp. May 25, 1690. (page 35 , baptism #552). Married, Nov. 1, 1715, Meeltjen Boogaard. (Hoes, p. 530, marriage #333). They had children:

A. Jannetje, bp. Sep. 2[illegible] 1716. (page 116, baptism #2434).

B. Maria Magdalena, bp. Feb. 9, 1718. (page 121, baptism #2562). Married, June 14, 1739, Johannes Schepmoes. (Hoes, p. 579, marriage #926). They had Lydia Schepmoes. (Olde Ulster, vol. 4, pages 347-348).

C. Lydia, bp. Sept. 10, 1721. (p. 137, bp. #2904).

f. Jan Slecht, bp. Nov. 11, 1694. (p. 43 baptism #817), married, Aug. [illegible], 1716, Elizab[illegible] Smeedes. (Hoes, p. 532 marriage #352). They had chil[illegible]en:

A. Benja[illegible] Slecht, bp. [illegible] 5, 1717. (page 120 , baptism #[illegible]541). Married, [illegible] 8, 1739, Anna Swart. (Hoes, p. 579, marriage [illegible]

B. Johannes Slecht, bp. [illegible] 8, 1719. (page 128 , baptism #2702).

Children of Jan Slecht (f) and Elizabeth Smedes ; (cont.):

C. Petrus Slecht, bp. Sept. 17, 1721. (page 137, baptism #2907). Died young.

D. Abraham Slecht, bp. May 24, 1724. (page 151, baptism #3221).

E. Magdalena Slecht, bp. July 10, 1726. (page 163, baptism #3496).

F. Rachel Slecht, bp. Nov. 17, 1728. (p. 178, baptism #3815. Died young. Incorrectly referred to as wife of Abraham Hasbrouck in the New York Genealogical and Biographical Record, v. 21, p. 123.

G. Rachel Slecht, bp. Jan. 4, 1730. (p. 185 , baptism #3965). She is the Rachel who married , Jan . 28, 1749 at Kingston, Abraham Hasbrouck. (Hoes, p. 598, marriage #1122).. He was baptized March 11 , 1722, the son of Solomon Hasbrouck and Sarah Van Wagenen, who were married in 1721. (New York Genealogical and Biographical Record, v. 21, p. 123).

H. Petrus Slecht, bp. June 25, 1732. (p. 190, baptism #4074).

I. Hendricus Slecht, bp. Feb. 2, 1735. (page 208 , baptism #4443).

J. Elizabeth Slecht, bp. Nov. 20, 1737. (page 230, baptism #4849). Probably the Elizabeth who married in 1762, Elias Hasbrouck, bp. June 21, 1741, brother of Abraham Hasbrouck. (New York Genealogical and Biographical Record, vol. 21, p. 123). They had two daughters, one of whom was Jane , and 5 sons, (Elias, John, Daniel, Montgomery, (who had Daniel , and John W.), and Peter, (who married Phoebe....., and had Elizabeth who married....Sleght. They had William and Ira Sleght). (LeFevre's "History of New Paltz, N. Y.", p. 374; and "Olde Ulster", v. 4, p. 283).

Children of Mattys Slecht (#5) cont.:
g. Cornelis Slecht, bp. Oct. 10, 1697. (p. 51, baptism #998).

h. Petrus Slecht, bp. Sept. 21, 170[illegible]. (p. 63 , baptism #1267).

Children of Hattys Slecht (#5), cont.:
i. Hendricus Slecht, bp. Dec. 22, 1706. (Hoes, p. 79 , baptism #1610). Listed with his brothers, Antoni , and Jan, in connection with a contract between owners of a land patent in 1744. (LeFevre's "History of New Paltz , N. Y.", p. 106). Married, Jan. 3, 1736, Sara Kierstede. (Hoes, p. 570, marriage #823). Had John Henry Slecht , who had Cornelius born 1774 at Fishkill, died 1869 at Sag Harbor. The Long Island family descends from him . (Harry D. Sleght's "Sleights of Sag Harbor"). Hendricus is listed in "Olde Ulster", vol. 7, p. 34, as fourth in line from Cornelis Barentsen Slecht, which is wrong, if, as also stated he was a nephew of Jacomyntje, his father's sister.

6. Petronella Cornelissen Slecht, married Jochem Hendrickse Schoonmaker, Aug. 31, 1679. (Hoes, p. 504). Date of Aug. 16, given in the New York Genealogical and Biographical Record, vol. 19, p. 23, and Anjou's "Ulster County Probate Records", vol. 1, p. 32 is incorrect. Said to have been born in Albany, but records of the church there, prior to 1683 are no longer in existence. After her death, about 1687, her husband married Ann Hussey. (LeFevre's "History of New Paltz", p. 499 and New York Gen. and Biog. Record previously quoted). Page 24 of the latter source, and "Olde Ulster", vol. 2, pp. 121-122, list the five children of Petronella . A daughter, Tryntje Schoonmaker, bp. Nov. 22, 1684, married, Nov. 18, 1704, Jacobus Bruyn, son of Jacobus Bruyn and Gertrude Esselsteyn, and had 14 children, who, with some of their descendants , are listed in the New York Genealogical and Biographical Record , vol. 20, pp. 27-29. A son, Cornelis Schoonmaker, married, Dec. 19 1711, Engeltje Roosa, bp. Sept. 20, 1685, the daughter of Arie Roosa and Maria Pels (daughter of Evert Pels).

7. There is documentary evidence, already referred to, which indicates that there was a sixth child, Jan, who was killed by Indians, which would account for the will of his parents listing only five children.

8. Sylvester, in his "History of Ulster County", part 1, p. 58, refers to a daughter of Slecht, who was captured by Indians, in 1663. It is said that she married a young warrior whom she so far civilized that they later settled in Marblotown, where he was given the name of Jan, but it is not known he was recognized by the family or not.

There was a Barent Cornelissen Slecht who arrived in New Netherland as a passenger on the ship "Purmerland Church" , in November, 1661. (O'Callaghan's "Documentary History of the State of New York", vol. 3, p. 53 in the 8vo. edition of 1850 and page 38 in the 4to. edition of 1850; and the New York Genealogical and Biographical Record, vol. 15, p. 39). That he may have been some relative of Cornelis Barentsen Slecht, appears likely. If he had been a son, then his death would have occurred prior to 1676 when

Cornelis and his wife made their will and at which time only five children were mentioned, none of them bearing the name of Barent Cornelissen Slecht.

Schoonmaker, in his "History of Kingston, N. Y.", p. 489 includes brief mention of the Slecht family, and miscellaneous records appear in Leng and Davis' "Staten Island and Its People", at page 954 of vol. 2. Further data can be derived from the "Calendar of Wills on File at Albany, N. Y." in which are included several of the family wills. Other miscellaneous records are included in Sylvester's "History of Ulster County," Part 2, p. 125.

APPENDIX F

- VAN DEN BERG LINE

The first of this line was evidently named
1. CORNELIS....., who had two known sons:-

2. Claes Cornelissen, and

3. Gysbert Cornelissen.

It is further believed that there was at least one more son,
4. GERRIT CORNELISSEN.

Of these sons, Claes is known to have been a resident of Albany as early as 1652, when he was recorded in the Van Rensselaer Bowier Manuscripts as the servant and brother of Gysbert Aende Berch. (page 842). His name appears in "Court Minutes of Rensselaerswyck, 1648-1652", pp. 163, 164, 168, 176-179; "Court Minutes of Fort Orange and Beverwyck, vol. 1, 1652-1656", pp. 117, 132, and 279; "Court Minutes of Albany, Rensselaerswyck and Schenectady"; and "Early Records of Albany", referred to in the main chapter. His son, Cornelis Claessen, married Susanna Ouderkerk, Dec. 13, 1693, and the record of their family is included on page 118 of Pearson's "First Settlers of Albany". Cornelis was a witness with his cousin, Willem Gysbertsen (son of Gysbert Cornelissen #3), at a baptism March 11, 1694. (Holland Society Yearbook, 1904, p.64).

Gysbert Cornelissen (#3), appears to have been the better known of the brothers. First mention of him is in the Van Rensselaer account books in 1648, and the Dutch Settlers Society of Albany list that year as the one of his arrival there. He is included in the list of colonists who took the oath of allegiance to the patroon, Nov. 28, 1651, his name being recorded as Gysbert Cornelisz aende Berg. (O'Callaghan's "History of New Netherland", vol. 2, p. 176). Another colonist, Gysbert Cornelissen Van Weesp, is also listed. In spite of the record clearly distinguishing between these two persons, each named Gysbert Cornelisz, several sources have mistakenly confused them as having been one and the same person. Among these sources can be mentioned O'Callaghan's, "History of New Netherland", vol. 1, p. 441; Munsell's "Annals of Albany", vol. 1, p. 23; Holland Society Yearbook, 1895, pp. 139-140; Talcott's "Genealogies of New York and New England Families" p. 305; and New York Genealogical and Biographical Record, volume 45, p. 390.

He is charged in the accounts of the colony with an annual rental of 300 guilders ($120) from 1648-1653 and 350 guilders and tithes from May 1, 1653 to May 1, 1675 and is listed in the books as late as 1685. (Van Rensselaer-Bowier MSS, pp. 769-770; 837. Other references are included on pp. 731, 734, 735, 739, 741).

APPENDIX F

- VAN DEN BERG LINE

The first of this line was evidently named
1. CORNELIS....., who had two known sons:-

2. Claes Cornelissen, and

3. Gysbert Cornelissen.

It is further believed that there was at least one more son,
4. GERRIT CORNELISSEN.

Of these sons, Claes is known to have been a resident of Albany as early as 1652, when he was recorded in the Van Rensselaer Bowier Manuscripts as the servant and brother of Gysbert Aende Berch. (page 842). His name appears in "Court Minutes of Rensselaerswyck, 1648-1652", pp. 163, 164, 168, 176-179; "Court Minutes of Fort Orange and Beverwyck, vol. 1, 1652-1656", pp. 117, 132, and 279; "Court Minutes of Albany, Rensselaerswyck and Schenectady"; and "Early Records of Albany", referred to in the main chapter. His son, Cornelis Claessen, married Susanna Ouderkerk, Dec. 13, 1693, and the record of their family is included on page 118 of Pearson's "First Settlers of Albany". Cornelis was a witness with his cousin, Willem Gysbertsen (son of Gysbert Cornelissen #3), at a baptism March 11, 1694. (Holland Society Yearbook, 1904, p. 64).

Gysbert Cornelissen (#3), appears to have been the better known of the brothers. First mention of him is in the Van Rensselaer account books in 1648, and the Dutch Settlers Society of Albany list that year as the one of his arrival there. He is included in the list of colonists who took the oath of allegiance to the patroon, Nov. 28, 1651, his name being recorded as Gysbert Cornelisz aende Berg. (O'Callaghan's "History of New Netherland", vol. 2, p. 176). Another colonist, Gysbert Cornelissen Van Weesp, is also listed. In spite of the record clearly distinguishing between these two persons, each named Gysbert Cornelisz, several sources have mistakenly confused them as having been one and the same person. Among these sources can be mentioned O'Callaghan's, "History of New Netherland", vol. 1, p. 441; Munsell's "Annals of Albany", vol. 1, p. 23; Holland Society Yearbook, 1895, pp. 139-140; Talcott's "Genealogies of New York and New England Families" p. 305; and New York Genealogical and Biographical Record, volume 45, p. 390.

He is charged in the accounts of the colony with an annual rental of 300 guilders ($120) from 1648-1653 and 350 guilders and tithes from May 1, 1653 to May 1, 1675 and is listed in the books as late as 1685. (Van Rensselaer-Bowier MSS, pp. 769-770; 837. Other references are included on pp. 731, 734, 735, 739, 741).

His name appears as Gysbert Cornelissen van Breuckelen, in a renewal of the lease for the farm called "de Hoogenberch", dated, June 23, 1654. (Van Rensselaer-Bowier MSS, pp. 769-770). Because of his connection with this farm, he was frequently referred to as Gysbert Cornelissen van den Hooganberch; op den berch; or aan de Berch. (V. R. B. MSS, p. 837). The name finally became Van den Berg.

A copy of the record of sale of a house by Marten Cornelissen (Van Buren) to Gysbert Cornelissen van den Berch, on May 20 1662, is included on page 157 of vol. 3 of "Early Records of Albany", and is referred to on page 208 of vol. 28 of the New York Genealogical and Biographical Record. This property was located "this side of Bethlehem", a settlement less than two miles below Albany. A later record, dated Sept. 20, 1663 relative to the same property is included on page 253 of the Albany records quoted above.

Gysbert Cornelissen is mentioned in "Court Minutes of Rensselaerswyck, 1648-1652", "Court Minutes of Fort Orange and Beverwyck, 1652-1656", vol. 1; and "Court Minutes of Albany, Colony of Rensselaerswyck and Schenectady, 1668-1673", vol. 1. He was listed in the census of the colony of Rensselaerswyck, June 16, 1697. (History of the County of Albany, by George R. Howell and Jonathan Tenney, pp. 272-274).

He was invited, along with his sons, Gerrit Gysbertsen and Willem Gysbertsen, to the burial of Jeremiah Van Rensselaer, the director of the colony, Oct. 17, 1674. (New York Genealogical and Biographical Record, vol. 48, p. 237-239).

He is erroneously referred to in "Hudson, Mohawk Genealogical Memoirs, vol. 3, p. 1306, as the son of Cornelis, who was the son of Claes Cornelissen (#2). He was a brother of Claes Cornelissen (#2) and not a grandson, as the "Memoirs" would have it. He is also referred to in vol. 4 of the same work, at page xv.

Gysbert's wife is said to have been Lysbet, the daughter of Claes Cornelis Segers Van Voorhoudt. Three sons, Cornelis Gysbertsen, Willem Gysbertsen, and Gerrit Gysbertsen, are listed by both Talcott and Pearson. A daughter, Gertje, is not listed by Pearson, and another daughter, Marritje, is not listed by Talcott. A copy of her baptismal record, July 5, 1685, is included on page 36 of the Holland Society Yearbook for 1904. Two other daughters, Grietje and Neeltje, are not listed by either Talcott or Pearson. Grietje married Andries Janez and had Barent baptized in Albany, Oct. 15, 1693. Wouter Quackenbos was a witness. (HSYB, 1904 p. 62). Neeltje married Wouter Quackenbos and had Marritje, baptized in Albany, Sept. 13, 16[illegible]. (HSYB, 190[illegible], p. 54).

Gysbert's son, Frederick Gysbertsen van den Bergh, is not in Talcott's listing. He was a corporal in the service of the West India Company at Fort Orange (Albany), in 1661. He removed to New Amsterdam soon after, as his name appears in the records there as

early as 1663. Several records of him are included in Fernow's, "Records of New Amsterdam, Minutes of the Court of Burgomasters and Schepens, 1653-1674". Early in 1664, he was one of the signers of the remonstrance to Governor Stuyvesant, for his course of action in attempting to defend the city of New Amsterdam against the superior forces of the English, and within the period from Oct. 21-26, of the same year, he took the oath of allegiance to the English crown, after the conquest of New Netherland. (Docs. v. 2, pp. 248-250; and v. 3, p. 75). In Dominie Selyn's list of the church members in New York in 1686, Frederick and his wife, Maria Lubberts are listed as residents on Lang's St. (Wilson's "Memorial History of the City of New York", vol. 1, p. 447). He is mentioned in "Early Records of Albany", vol. 3, pp. 77, 160, 186.

Gysbert Cornelissen's sons, Cornelis, Willem, and Gerrit, all had families, of whom detailed records are given by Pearson, the compilation by Talcott listing only the family record of Cornelis Gysbertsen. A brother-in-law of these three sons, Wouter Quackenbos, (husband of Neeltje Gysbertsen), was a witness at the baptism of Cornelis' son, Cornelis, Oct. 2, 1687, and at the baptism of Willem's daughter, Geertje, April 10, 1698. Willem's sister, Geertje, was also a witness at the latter baptism. (HSYB, 1904, pp. 43, 77). The record of Willem's family also appears in the New York Genealogical and Biographical Record, vol. 2, p. 192). Wouter Quackenbos was also a witness at the baptism of Gerrit Gysbertsen's son, Gerrit, July 15, 1688. (HSYB, p. 45). Pearson does not list a daughter, Anneke, bp. Dec. 6, 1685, (HSYB, p. 38), and there were evidently at least five children, the census of June 16, 1697 listing that number. (Howell and Tenney "History of the County of Albany", pp. 272-274). Records of later generations of these family lines are included in Pearson's volume.

Data relative to the family of Gerrit Cornelissen (#4) is included in Chapter IV of this volume.

APPENDIX G

LANSING LINE

The probably erroneous statement that Gerrit Fredericks Lansing was the ancestor of the family in America, and the definitely incorrect statement that the Lansing ancestor had accompanied his family to America, have been included in a number of sources, among them being the following:

American Historical Society, "Americana", vol. 26, p. 290.

History of Albany, N. Y., 1609-1800, by Geo. R. Howell and Jonathan Tenney, pp. 931-932.

History of Herkimer County, N. Y., by Geo. A. Hardin, p.470.

History of the Reformed Dutch Church of Tappan, N. Y., 1694-1894, by Rev. David Cole, p. 72.

Holland Society Yearbook for 1904, p. 266; and for 1908, pp. 221-222.

New York Genealogical and Biographical Record, vol. 3, pages 84-85; vol. 39, p. 38; vol. 45, p. 389.

St. Nicholas Society of the City of New York, Genealogical Record for 1905, p. 230.

The ancestor of the family in America, Gerrit Lansing, who was deceased before his widow (then remarried) and children came over, has been confused with his son, also named Gerrit, who was in Albany in 1655. (Early Records of Albany, pp. 107, 113 of vol. 1).

Miscellaneous records of the Lansing family have been noted in the following works:

Biographical Record of Dutchess and Putnam Counties, by J. H. Beers and Co., pp. 34-35.

Calendar of Wills on File at Albany, by Berthold Fernow.

Genealogical and Family History of Northern New York, by Mr. Wm. R. Cutter, vol. 1, pp. 398-401.

Genealogical and Family History of Southern New York and the Hudson River Valley, by Cuyler Reynolds, vol. 1, p. 425.

Hudson, Mohawk Valley Genealogical and Family Memoirs, by the Lewis Historical Publishing Co., vol. 1, pp. 72-77; 130-133; vol. 2, pp. 904-905; vol. 3, pp. 1175-1176; vol. 4, pp. 1640-1642, and xxv.

APPENDIX H

TEN EYCK LINE

Mr. George's genealogy of the Ten Eyck family , published in the New York Genealogical and Biographical Record, vol. 63, 1932, includes certain family records which represent corrections and additions to Talcott's " Genealogical Notes of New York and New England Families", 1883. It is not the intention to list here a comparison of the entire contents of both compilations, the items following being only those which were encountered in earlier generations.

Page 228 of Talcott.
Maria, the third child of Conrad Ten Eyck (#1), should have been listed before Margarita.

Coenradt Ten Eyck (#6) did not marry Annetje Daniels. It was his father (#1).

Page 230 of Talcott.
Children of Tobias Ten Eyck (#5):-
Johannes should read Johanna.
Not listed are the following; Adrian, Altje, Margarietje.

The wife of Coenradt Ten Eyck (#6), Boletje Hereks, did not die as early as indicated by Talcott, nor did Coenradt marry for his second wife, Annetje Daniels, as she was the second wife of his father.

No children listed for Coenraet (#[illegible]), of whom there were 7.

Page 231 of Talcott.
Children of Hendrick Ten Eyck (#7):
Not listed is Maria who should follow Coenradt (#41).

Children of Mathys Ten Eyck (#8):-
Only one child listed. Eight additional ones not listed.

Page 233 of Talcott.
Children of Jacob Ten Eyck (#19):-
Not listed is Coenradt, after Andries.

Children of Andries Ten Eyck (#20):-
Not listed are Jacob, Maria, Abraham.

Page 234 of Talcott.
Children of Coenraet Ten Eyck (#41):
Geertje (#[illegible]), birth date given as [illegible] 17, 1710. She was born in July 1710, and was the daughter of Coenraedt (#12) , and Geertje Van Schaick, not Coenraedt (#41 . The date given by Talcott as the date of birth, was the date of baptism, as shown in the Collections of the New York Genealogical and Biographical Society, vol. 2, p. 347. The correct month of her birth, July, is

given in an original family record, a copy of which is included on pages 31-32 of vol. 1 of the New York Genealogical and Biographical Record. Talcott had already listed her correctly on p. 231 as (#50), daughter of Coenraedt (#12).

Four children, (#96, 97, 98, 99), also listed by Talcott as children of Coenraedt (#41) and Petronella De Wit. This is also an error, as they were children of Coenraedt (#30) and Sara Van Voorst, as evidenced from the church records, and as set forth by Mr. George. Talcott lists no children for Coenraedt (#30).

- - - - - - - - - - - - - - - - - -

The following miscellaneous items are included here, as they supplement Mr. George's compilation. Page numbers listed, refer to vol. 63 of the New York Genealogical and Biographical Record, in which is contained the Ten Eyck genealogy.

Page 157.
Mr. George's reference to the date of the will of Johanna De Bruyn, as Oct. 1, 1702, compares with a date of Nov. 30, 1709 for her will and Oct. 11, 1702 for the will of Hendrick De Bruyn, her third husband as given in the Collections of the New York Historical Society, vol. 2 of Abstracts of Wills, pp. 51-53, and 25.

Pages 160-161.
Coenraet Ten Eyck (#22). His will, referred to in the genealogy is recorded in liber 23 of New York Wills, at page 317, and a copy is included on pp. 148-149 of vol. 6 of the New York Historical Society's "Abstracts of Wills". Dated Jan. 11, 1758, and proved May 3, 1762, it mentions no wife or children, evidently the basis upon which Mr. George concludes that Coenraet was a bachelor. He mentions Neeltje Roorback the only child of Dirck Ten Eyck deceased. This Dirck was probably #26, a brother of Coenraet, and for whom no children are listed by Mr. George on page 161.

Page 163.
The will of Jacob Ten Eyck (#57) is listed in vol. 32 of the Archives of the State of New Jersey, at page 320, being vol. 3 of Abstracts of Wills. Dated June 25, 1752, the will was proved Mar. 28, 1754, An abstract of the will of his son-in-law, Jacob Van Neste, husband of Catherine Ten Eyck (#134), appears on page 338 of the same volume. Will made April 2, 1752 and proved April 3, 1753. Jacob Ten Eyck and his wife Jacomyntje (Van Neste) were two of the witnesses.

Mr. George does not list any children for Coenraet Ten Eyck, (#122). An abstract of his will is included in vol. 34 of the New Jersey Archives, at page 519, being vol. 5 of abstracts of wills. Dated Oct. 12, 1776, it was proved Oct 25, 1777. His sister, Catherine (Ten Eyck) Van Wagenen, wife of Gerrit Van Wagenen (#44 in the Van Wagenen genealogy) was a witness. Coenraet's children are referred to in the will.

Coenraet had a daughter, Catherine, who married Rynear Vechten. After her death, Rynear married Catherine Van Wagenen, (#54 in the Van Wagenen genealogy), daughter of Catherine (Ten Eyck), Van Wagenen, the sister of Coenraet -their respective daughters, both named Catherine, being first cousins, a fact which is alluded to in the second paragraph of page 26 of the Van Wagenen genealogy.

The following volumes contain information of the family, none of which is not incorporated in Mr. George's work, however.

Bergen Family, by Teunis G. Bergen, 1876, p. 517.
First Settlers of Albany, N. Y., by Jonathan Pearson, pages 109-110.
First Settlers of Schenectady, by Jonathan Pearson, pp. 191-192.
Genealogical and Memorial History of the State of New Jersey by Francis Bazley Lee. Vol. 3, pp. 1012-1014.
History of Hunterdon and Somerset Counties, N. J., by James Snell, pp. 561, 601-602.
History of Kingston, N. Y., by Marius Schoonmaker, p. 490.
History of New Netherland, by E. B. O'Callaghan, vol. 2, p. 569.
History of the City of New York, by David T. Valentine, page 328.
Holland Society of New York. Yearbook for 1896, p. 175; for 1911, p. 121; for 1916, p. 21.
Hudson Mohawk Genealogical Memoirs, vol. 1, pp. 130-133; and 414-415; also vol. 4, p. xxxiv.
Memorial History of the City of New York, James Grant Wilson vol. 1, p. 305.
New York Genealogical and Biographical Record, vol. 1, pages 31-32; vol. 72, pp. 54-55.
Somerset County (N. J.) Historical Quarterlies, v. 6, p. 42.
St. Nicholas Society of the City of New York, Genealogical Record for 1905, p. 253, and for 1916, pp. 121-122.

In addition to Talcott's genealogy of the family, to which a reference has been made earlier in the appendix, other records are included on pp. 297-298 of Bergen's "Register of the Early Settlers of Kings County, L. I., and several families can be derived from Fernow's "Calendar of New York Wills".

Olde Ulster, by B. M. Brink, vol. 5, p. 234; and vol. 6, pp. 332-335.

APPENDIX I

BOGART LINE

Talcott has named as one of the sons of Guysbert (#4), an Adrian Guysbertsen Bogart (#12). An Adrian Bogart is known to have been the widower of Susannah Hamilton and to have married in New York, Sept. 4, 1685, Belitje Post. (Collections of the New York Genealogical and Biographical Society vol. 1, p. 53). This same Adrian is credited by Talcott, page 28, as having been the father of several children, yet the writer, in checking the records of baptisms in vol. 2 of the Collections, finds that in all cases, the father's name is given as Adrian Cornelissen, and not Bogart. The mother's name is given as Rebecca Idens. Therefore if this Adrian was a Bogart, he certainly was not a son of Guysbert, as his name would have been recorded as Adrian Guysbertsen. It is possible, however, that Adrian Bogart was a son of Guysbert Cornelissen Bogart (#4), and that he and Adrian Cornelissen were two separate and distinct persons, the latter, perhaps, bearing no relationship to the Bogart family. Versteeg asks 'Who was Adrian Bogart'.

Bergen, in his "Bergen Family" (1876), page 75, names as a supposed son of Guysbert Teunissen Bogart, Cornelis Guysbertsen Bogart who married Cornelia....and settled on the Raritan River in New Jersey. A similar reference is made on page 77.

The National Genealogical Quarterly, volume 29, page 90, includes a reference to the same Cornelis, names his wife as Cornelia Jansen and adds that he settled in Amwell, N. J.

Talcott, p. 26, lists as a son of Hendrick Bogart (#8), Cornelis Bogart (#27) who married Cornelia Delameter and settled in Amwell, N. J. The present township of Raritan (Hunterdon County), formerly comprised about one fourth of the old Amwell Township.

Bergen in his "Register of the Early Settlers of Kings County, L. I.", pp. 40, 41, also lists Cornelis as a son of Guysbert Teunissen Bogart, adding that he married a daughter of Nicholas Volckertsen, and in 1752 resided on the Raritan, but of Brooklyn in 1711.

Some confusion exists, therefore, as to just who this Cornelis was. The Cornelis whom Bergen ("Early Settlers", page 41) supposes was a son of Teunis Guysbertsen Bogart (#11), was probably one of those to whom reference has just been made, and not a son of Teunis.

The possibility that Guysbert Bo[illegible] - referred to on page 60 of this current work as the son of [illegible]sbert Bogart, Jr. (#126) could have been the son of some other [illegible]ber of the Bogart family, has been investigated by the writ[illegible]. Cornelis Bogart, not a listing in Talcott, page 34 as a son of Guysbert Teunissen Bogart (#52), but so listed in Bergen's "Regis[illegible]r of the Early Settlers

of Kings County, L. I., pp. 40-41, and in his "Bergen Family", p. 77, is said to have located on the Raritan River, Somerset County, N. J. He had a son Guysbert who, according to Bergen, married Antie Lot. Any possibility that he was the Guysbert who was the father of Sarah Bogart and grandfather of Garret Conrad Van Wagnen (the subject of this volume), is ruled out from the evidence already given, which shows that Sarah's father's first wife was named Maria, and his second wife (Sarah's mother), was Elizabeth Bodine.

Teunis Bogart (#123), another brother of Guysbert Bogart Jr. was the father of a son, Guysbert Bogart (#215), as indicated by Talcott, page 41. No date of birth or baptism is given nor is his wife named. From the fact that two of his brothers were born in 1718 and 1720, it was thought possible that this Guysbert could have been born about 1719, and therefore satisfy the record which shows the age of Sarah's father as 65 in 1785. Later findings reveal that this Guysbert married Annetje Repalje, thus ruling him out as Sarah's father. (Stoutenburgh's "Documentary History of the Dutch Congregation of Oyster Bay, L. I.", p.149 , and Bergen "Register of the Early Settlers of Kings County, L. I.", pp. 41-42) .

Simon Bogart (#125), another brother of Guysbert Bogart, Jr. is shown by Talcott, p. 41, to have been the father of a son who was named Guysbert. He was born, however, in 1729, and is eliminated as having been Sarah's father, born in 1719 or 1720.

A Cornelis Bogart, probably the one to whom reference has already been made as having been the one who settled on the Raritan River in New Jersey, is known to have married a Cornelia and their children are recorded in the copies of the church records appearing in vols. 2 and 4 of the Somerset County (N. J.) Historical Quarterlies. Of their numerous children , the only one born about 1719 or 1720, was Jacob, bp. Aug. 12, 1720 (vol. 2, p. 210) and none of their children bore the name Guysbert.

Miscellaneous Bogart records, some of which are not directly applicable to the preceeding records, have been noted as follows:

Annals of Staten Island, by J. J. Clute, pp. 346-347.

Bergen Family, by T. G. Bergen, 1876, pp. 74-75.

Documentary History of the Dutch Congregation of Oyster Bay, L. I., by Henry A. Stoutenburgh pp. 142-149; 789.

Genealogical Notes of New York and New England Families , by S. V. Talcott, pp. 22-63; 427-429.

Hudson Mohawk Genealogical and Family Memoirs, vol. 4 , page xv.

National Genealogical Society Quarterly, vol. 29, pp. 89-90.

Genealogical and Family History of New York, by Wm. S. Pelletrau, vol. 1, pp. 138-142.

New Netherland Register, by Dingman Versteeg, vol. 1, pp. 88 to 100.

New York Genealogical and Biographical Record, vol. 50, page 397, a book review of "Some Notes on the History of the Bogart Family in Canada", by Marshall C. Bogart. This book has not been reviewed by the writer.

Ditto, vol. 53, pp. 272-279. Bogart records of an entirely different lineage.

Pre-Revolutionary Dutch Houses and Families in Northern New Jersey and Southern New York, by Miss Rosalie Fellows Bailey pp. 282-283.

Register of the Early Settlers of Kings County, L. I., by T. G. Bergen, pp. 40-42.

Revised History of Harlem, by James Riker, pp. 447-475.

Somerset County Historical Quarterlies, vol. 4, pp. 74-75.

Staten Island and its People, by Chas. W. Leng and Wm. T. Davis, vol. 2, p. 866.

APPENDIX J

RAPALJE LINE

Miscellaneous information supplementing the Rapalje records in Riker's "Annals of Newtown, Queens County, N. Y.", has been encountered as follows:

Holgate's "American Genealogy", pp. 19, 20, contains records of Jan Rapalje (son of Joris Jansen Rapalje) for whom Riker, page 268 states there were no surviving issue. Holgate's lineage from Jeronimus (son of Joris Jansen Rapalje), given on page 21, does not agree with the lineage as given by Riker at page 269.

Additional data of Maria Rapalje (Riker, p. 268), appears in vol. 22 of the New York Genealogical and Biographical Record, at page 158.

Additional data of Jan Rapalje (Riker, pp. 269, 270), appears in vol. 1 of the National Genealogical Society Quarterly, at page 51. Page 48 of the same publication is generally of the same content as the corresponding data in Riker's volume.

Bergen's "Early Settlers of Kings County", page 234, is incorrect in the date of birth of Daniel Jonise Rapalje, son of Joris Jansen Rapalje, as the year should be listed as 1650, and <u>not</u> 1652.

Five of the volumes mentioned in the early part of this work contain considerable information relative to later generations of the family, these records being Riker's "Annals of Newtown, Queens Co., N. Y.; Bergen's "Register of the Early Settlers of Kings Co. N. Y."; Stoutenburgh's "Documentary History of the Dutch Congregation of Oyster Bay, L. I."; vol. . of Hamm's "Famous Families of New York; and vol. 3 of Pelletreau's "Genealogical and Family History of New York". In order to correlate these five volumes in regard to this data, tables have been arranged on the following page, using Riker's work as the "key" against which each of the 4 other volumes are compared. Riker's work has been used, as it has by far the greatest number of individual records against which a comparison can be made. The <u>main</u> names, as they appear in each of the 4 volumes, are listed first, followed by the page number on which they occur in the respective volumes. The third column of each table gives the page number in Riker's "Annals of Newtown", on which the same persons are recorded, thus providing a method by which the lineage of these persons can be readily determined.

Name	Page number in Bergen's volume	Page number in Riker's volume
(1698) Cornelis	231	269
(1650) Daniel Jorise	231-232	271-272
(1691) Daniel	232	272
(1699) Daniel	232	273
(1675) George	232	272
George Janse	232	270-271
George	232-233	270
(1639) Jacob Jorise	233	268
(1679) Jacob Jeronimuse	233	269
(1633) Jan Jorise	233	268
(1673) Jan Jeronimuse	233	270
(1643) Jeronimus Jorise	233	269
(1682) Jeronimus	233-234	269
Jeronimus Teunise	234	269
John	234	270
Joris Jansen	234	267-268
Joris Jeronimuse	234	269
(1675) Joris	234-235	272-273
Joris Teunise	235	270
(1671) Teunis	235	269
Tunis	235	269

Name	Page number in Hamm's volume	Page number in Riker
Sarah	64	268
Jeronimus	64	269
Daniel (1650)	65	271-272
Tunis (1671)	65	269
Jacob (1679)	65	269
Cornelius (1698)	65	269
Jeronimus (1682)	65	269
Daniel (1691)	65-66	272
George	66	270
Jeronimus	66	269
Derrick	66	269
Daniel	66	272
Folkert (1715)	66-67	270
Daniel (1742)	67	272
Williamson	67	272
Daniel	67	---
Rem (1748)	68	270
George E.	68	---
George	69	---
Jacob	69	---

Name	Page number in Stoutenburgh's vol	Page number in Riker's volume
(1699) Daniel	444	---
Dow D.	444	279
George (Joris)	444-445	267-268
(1675) George	446	272-273
(1721) George	446	273
(1731) George	446-447	274
(1781) George	447	---
Jacob	447	278
(1752) Jacob	447	274
(1758) Jacob	447-448	279
(1772) Jacob	448	275
(1682) Jeronimus	448	269
Martin	449	---
Minna S.	449	---
(1756) Peter	449	278
(1788) Rem	449	---
(1710) Roelof	449-450	---
Tunis	450	---

Name	Page number Pelletreau's volume	Page number in Riker
Daniel	135-136	271-272
Joris	136-137	272-273
John	137	277
George	137-138	277
Jacob	138-142	---
Jeronimus	142-143	279
Cornelius	143-145	279-280

The following volumes have also been reviewed by the writer, with the object in mind that no source would be omitted, which if available, might possibly reveal further details of the histories of the various families. In addition to these, several other volumes which were reviewed contained no information of value for this specific project, and are therefore omitted from the list.

Dutch Settlers Society of Albany, N. Y. Yearbook for 1926 at page 5.

Genealogical and Personal Memorial of Mercer County, N. J., by Francis Bazley Lee, pp. 666-667.

History of the City of Albany, N. Y., by A. J. Weise, pages 21, 25.

History of the City of Brooklyn, by Henry R. Stiles, pp. 16, 17, 23, 24, 25, 33, 34, 47, 85-90, 111, 113-116, 413, 414, 425-427. (Vol. 1).

History of the City of Brooklyn and Kings County, by Stephen M. Ostrander. (vol. 1). Kapalje records included from pages 29-36, are duplicates of those in Stiles' volume listed above.

History of Kings County and City of Brooklyn, by Henry R. Stiles. (vol. 1). Data on pp. 80, 87 is a duplicate of pp. 23-25, and 85-90 of his "History of the City of Brooklyn".

History of the City of New York, by David T. Valentine, page 144.

History of New Netherland, by E. B. O'Callaghan, vol. 2, pp. 581, 585.

History of the City of New York, by Martha J. Lamb, vol. 1, pp. 56-57.

History of the State of New York, by Columbia Univ. Press, vol. 1, pp. 235-236; 243.

Historic New York, by Maude Alder Goodwin, vol. 2, pp. 389-391.

Leslie's History of the Greater New York, by Daniel Van Pelt vol. 2, pp. 17-19.

Memoirs of the Long Island Historical Society, vol. 1, page 342.

New York Genealogical and Biographical Record, v. 8, p. 124.
v. 13, p. 37.
v. 27, p. 35-37
v. 46, p. 225.
v. 57, p. 208.
v. 59, p. 60.

Somerset County (N. J.) Historical Quarterlies, vol. 5, page 283.

St. Nicholas Society of the City of New York, yearbook for 1905, p. 244.

Holland Society of New York, yearbooks for 1920, p. 178, and for 1928, p. 317.

The most complete record, however, is included on pp. 22-58, of Bergen's "Bergen Family" (1876), in which are incorporated all of the various accounts in the above references, in addition to several items which appear in the volumes referred to in the main chapter of this current work.

APPENDIX K

VAN SCHOUW LINE

As late as 1940, the supposition that Claes Cornelissen Van Schouw was the progenitor of the Wyckoff family, still remained a belief of at least some of those members of the family who, belonging to the Wyckoff Association in America, are engaged in the process of compiling a history of the family which will supplement the existing genealogy, and bring the records down to the present time. Tentatively scheduled for release in 1947, and with the possibility that Van Schouw's supposed, and highly doubtful, connection with the family will be incorporated as definite fact this writer, upon learning of the proposed volume early in February of 1946 (outlined in the Wyckoff Family Bulletin), wrote the Historian of the Association, calling her attention to Mr. Hoppin's chapter in his "Washington Ancestry...", which covers nearly every phase of research relative to Van Schouw, and which repudiates, quite clearly, any claims that Van Schouw was the Wyckoff ancestor.

An article appearing in the American Genealogist, vol. xxii, (1945), pp. 65-71, written by Mr. William J. Hoffman, a foremost authority in genealogical research, not only refers to Mr. Hoppin's work, but also adds further arguments, backed by documentary evidence, that Van Schouw was not the progenitor of the Wyckoff family. He makes reference to a volume titled "The Old World Progenitors of the Wyckoff Family, by Wm. LeRoy Wyckoff and Herbert James Wyckoff, in which are given certain statements relative to Van Schouw having originally come from Rödö, Sweden, prior to his settlement in Schouwen. Mr. Hoffman does not concur in this opinion.

In order to make more complete the chapter in this volume relative to Van Schouw, the names of two more of his children are listed in this appendix, Mr. Hoffman's studies, based on logical deductions, disclosing that a daughter Tryntje (married Joris Jacobsen) and a daughter Geertje (married Hendrick Volckertsz Bries), preceeded Pieterje Claessen, until now listed as the first child. Children of these three, as well as of a son, Gerbrandt, are also listed by Mr. Hoffman.

During the course of this writer's investigations of family lines collateral to the Van Wagnen lineage, and prior to the discovery of Mr. Hoppin's splendid work, it appeared likely that the common ancestor of the Wyckoff family, was also the ancestor of one branch in the Van Wagnen line. This resulted in the finding of a few sources dealing with the Wyckoff family, which, despite the fact that they no longer have a bearing on this volume, are nevertheless important enough to be listed as source material for records of that family. These sources are listed on the following page.

Register of the Early Settlers of Kings County, L. I., by T. G. Bergen, pp. 394-398.

History of Hunterdon and Somerset Counties, N. J., by James P. Snell, page 490.

The Washington Ancestry, by Charles A. Hoppin, vol. 3, pp. 101-138.

Somerset County (N. J.) Historical Quarterlies as follows:
Vol. 2, pp. 189-194.

Vol. 3, pp. 35-42; 197-206.

Vol. 4, pp. 66-70; 125-132; 220-227; 282-287.

Vol. 5, pp. 134-139; 207-218; 283-294.

Vol. 6, pp. 49-54; 84; 128-141.

Vol. 8, pp. 49-53.

The Wyckoff Family in America, by Mr. and Mrs. M. B. Streeter, from records gathered by Mr. William F. Wyckoff, the compiler of the records appearing in vols. 2-5, inclusive, of the Quarterlies mentioned above. It is of interest to note that the Wyckoff genealogy makes no reference to Claes Cornelissen having been the ancestor of the family.

APPENDIX L

BERGEN LINE

In order to complete the files for source material for the Bergen records, the following volumes can be listed, none of them including data which is not adequately covered in the family genealogy, however.

Bergen Family in the Line of Michael Hansen Bergen, by Mrs. Margaret Hubbard (Bergen). Not reviewed by this writer.

Documentary History of the Dutch Congregation of Oyster Bay, L. I., by Henry A. Stoutenburgh, p. 387.

History of the City of Brooklyn, by Henry R. Stiles, vol. 1 pp. 88-95.

History of the City of Brooklyn and Kings County, by Stephen M. Ostrander. Bergen records included on pp. 66, 67 of vol. 1, are duplicates of those appearing in Stiles' work listed above.

History of Kings County and City of Brooklyn, by Henry R. Stiles. Bergen records on page 87 of vol. 1, duplicate portions of his "History of the City of Brooklyn", referred to above.

Register of the Early Settlers of Kings County, L. I., by T. G. Bergen, pp. 31-34.

Somerset County (N. J.) Historical Quarterlies, vol. 5, pp. 121-122.

APPENDIX M

BODINE LINE

Most of the Bodine records included in various sources, generally agree with the genealogy compiled by Mary Elizabeth Sinnott and included in her work referred to in Chapter XIV. Some errors and discrepancies have been noted in these miscellaneous sources, altho a few of them include records which are additional to those in Sinnott's work. Two of them - "History of Hunterdon and Somerset Counties, N. J.", by James Snell (p. 490), and "Somerset County Historical Quarterlies", vol. 2, - to which frequent mention is made in the text which follows, are, for the sake of brevity, referred to simply as "Snell", and "Som. Q.". Sources other than these are identified without abbreviation.

The pages of Sinnott's work are listed in numerical order, and those references from other sources which are applicable to that work, are listed for the respective pages. Most of the data included in the various sources is either a basis for, or a copy of, parts of Sinnott's work, depending upon the relative years of publication of the respective works. It is not the purpose of the text to describe the extent of the material included in the volumes reviewed, except insofar as it represents either corrections to the several sources, or additions to Sinnott's work.

Page 154 of Sinnott:

Clute's "Annals of Staten Island", page 344, and Salter's "History of Monmouth and Ocean Counties, N. J.", page "x" in the genealogical records, in referring to the Jean Bodine who was the first of the family in America, have mistakenly named Jean Bodine (#2), instead of his father, Jean (#1).

Chamber's "Early Germans of New Jersey", p. 267; Somerset County Historical Quarterlies, vol. 5, p. 122; Leng and Davis v.2 "Staten Island and its People", pp. 365-366, are in error in the statement that the Jean Bodine (#1), who died in 1695, married Esther Bridon. It was his son, Jean (#2), who married her as his second wife.

Baird's "Huguenot Emigration to America", vol. 2, pp. 38-39, gives the date of naturalization (in England) of Jean Bodine (#2) as Oct. 14, 1681. Sinnott shows Mar. 21, 1682.

Lee's "Genealogical and Memorial History of the State of New Jersey", vol. 4, p. 1368, gives the date of the first marriage of Jean Bodine (#2), as Jan. 11, 1680, evidently derived from a record in the Flatbush Church records, to which a reference has been made in Chapter XIV of this volume. If it is true that Jean was naturalized in England, with his second wife in 1681 or 1682, and that he had children by his second marriage, who were baptized in 1680 and 1681, then his marriage to his first wife could not have taken place in 1680, as the record would appear to indicate, par-

ticularly in view of the fact that he is supposed to have had at least five children by his first marriage.

Page 155 of Sinnott:
Clute's "Annals of Staten Island", p. 344, and the "History of the Tremain Family in America", by Tremain and Poole, vol. 1, pp. 836-837, state that Jean Bodine (#2) was still living in 1744 when he and his wife sold land on Staten Island. Records quoted on an earlier page in the Bodine chapter, give the year as 1737. If 1744 is correct, and 1645 is the correct year of Jean's birth, he would have been 99 years of age at the time of his death, and some sort of error is therefore indicated.

Lee's "Genealogical and Memorial History of the State of New Jersey", vol. 4, pp. 1368-1370, gives the name of the first wife of Jean Bodine (#2) as Maria Crocheron, whose first name is not given by Sinnott. A statement on page 1368 that land purchased by Jean Bodine (#2) in 1701 was opposite Staten Island, is incorrect as this land was located on the west side of the island, which at that time was referred to as East Jersey.

Page 157 of Sinnott:
Children of Isaac Bodine (#3):-
John, bp. Nov. 19, 1703 according to Snell. Som. Q., p. 41, and Sinnott, give October as the month.
Katelyn, bp. Aug. 8, 1713 according to Snell. Sinnott gives, as the date, Nov. 2, and the Som. Q. contains no record.
Isaac, bp. April 5, 1715 according to Snell. Sinnott gives May 18. He evidently died young. Som. Q. also gives the date May 18. (p. 142).
Abraham, bp. July 31, 1717. He has been erroneously referred to by Chambers, in his "Early Germans of New Jersey", p. 268, and by Snell, as the son of a John Bodine who had a plantation on the west side of the North Branch of the Raritan.

Elizabeth Bodine, 8th. child of Isaac, bp. Oct. 31, 1719, in Snell's volume, Som. Q., p. 210, gives Oct. 14, and Sinnott gives the date as Oct. 13.

The records of baptisms of Isaac's other children, as listed in Snell, Somerset Quarterly, and Sinnott, agree, one with the other.

John Bodine, first son of Abraham Bodine and Mary Low, bp. April 15, 1745 according to Snell. Sinnott gives 1743 which evidently is correct. Mary Low was bp. April 14, 1721. (Riker's "Revised History of Harlem", p. 581). This John may have been the one who married Maria Van Hoesen, born Mar. 19, 1747 and had Johannes bp. Mar. 18, 1770; Abraham [illegible] 9, 1785; Isaac; and probably Annetje. (New York Genealogical and Biographical Record, vol. 51, pp. 287-288).

Snell and Som. Q. do not list Abraham's daughter, Jane, whose birth is given by Sinnott as coming between Catalyntje and Sarah. Sarah's birth year, given by Snell as 1755, is incorrect. She was born in 1753.

Abraham's 7th. child, Cornelius Bodine married Margaret Sutphen. Snell states that she was from Six-Mile Run, Somerset County, and that she was born in 1754.

Page 158 of Sinnott:
Children of Isaac Bodine (#3):-
Hester, and the twins, Isaac and Jannetje, are said by Sinnott to have been baptized in the Readington Church. They are included, however, in the Somerset County Historical Quarterlies, vol. 2, as having been baptized in the Raritan (now Somerville), Church.

Children of Jacob Bodine (#4):-
Mary, bp. April 25, 1711, according to Sinnott and Som. Q., p. 139, is not listed in Snell.

John, named in Snell, but no date given for his baptism. He was baptized Oct. 9, 1714, according to Som. Q., p. 141, and Oct. 4, according to Sinnott.

Jacob, 4th. child of Jacob (#4). His will names his children as Jacob and Nicholas, wards of Cornelius Bodine (his brother, no doubt). These children are not listed in Sinnott. Sinnott has confused Catherine, wife of Jacob, Jr.,-who administered his estate, and who was a widow prior to May 23, 1748,- with the Catherine who was the second wife of Jacob's father. (Documents Relating to the Colonial History of the State of New Jersey, volume 30, being vol. 2, p. 50 of Abstracts of Wills).

Catherine, named in Snell, but no baptismal date given. Som. Q., p. 211 gives the date as May 7, 1721, and Sinnott gives April 2.

Antje, named in Snell, but no baptismal date given. Som. Q. p. 213, gives the date as Aug. 21, 1726, and Sinnott gives August 27.

Page 162 of Sinnott:
Abraham Bodine was the father of ten children according to Sinnott. Snell states there were nine, but does not name all of them.

Catherine, the first child, bp. April 14, 1725, according to Snell and Sinnott. Som. Q., p. 213, gives the date as April 4.

The last name of the wife of Peter, second child of Abraham, is not given by Snell. Sinnott gives the full name as Mary Wartrebe.

Date of Peter Bodine's baptism, given as December , 1726, by Snell. Som. Q., p. 214, gives Dec. 1. Sinnott gives Dec. 14th. His second wife, Judick Bodine, was a daughter of Abraham Bodine, the 7th. child of Isaac Bodine (#3), listed on page 157.

John, 4th. child of Abraham, bp. Dec. 5, 1730, according to Snell, and Sept. 6 by Sinnott. Not listed in Som. Q.

Judick, 6th. child, bp. Mar. 17, 1735 , according to Snell, and April 20 by Sinnott and Som. Q., p. 218.

Page 161 of Sinnott:
Children of Peter Bodine (#5):-
Peter, first child, born about 1710 according to Sinnott, is not listed in Som. Q., or Snell.

Page 164 of Sinnott:
A statement on page 122 of vol. 5, of the Somerset County Historical Quarterlies, that Francis Bodine (#3) was a son of the Jean Bodine (#1) who died in 1695, is an error , as it was Jean (#2) who was the father of Francis. --Also in error is the statement that Francis heads the Somerset County line. He settled in Middlesex County, according to Sinnott.

Chambers' "Early Germans of New Jersey, pp. 267-269 , adds that perhaps Francis was father of Isaac (#3). This cannot be the correct relationship, as he evidently was a brother of Isaac. A volume titled "First Settlers of Piscataway and Woodbridge, N. J." by Monette, at page 791 of Part 5, states as fact the father and son relationship expressed as a possibility by Chambers. The latter's records, including additional ones on page 503, are in general agreement with Sinnott's work. He has, however, incorrectly indicated the parentage of the individuals whom he lists as the children of Francis Bodine.

The "History of the Tremain Family in America" , by Tremaine and Poole, vol. 1, pp. 833-834, has information of Maria Dey, who married Francis Bodine. Page 837 lists only one child, John. However, Sinnott lists three. Records of the branch of the Dey family of which Maria Dey was a member, are included in vol. 1, pp. 833-839; and in vol. 2, pp. 1159 to 1166t, of the Tremain work.

Page 165 of Sinnott:
Salter's "History of Monmouth and Ocean Counties, N. J.", p. "x" in the genealogical records, shows a son Edmund for John Bodine and Catherine Britton. Edmund is not listed in Sinnott.

Clute's "Annals of Staten Island", and the Tremain genealogy vol. 1, p. 849, show Jacob Bodine, 1th. child of John , the third child of John (#10), had children, [illegible] J., Edmund, Capt. John , James, Jacob, Albert, and three daughters. None of these are included with Sinnott's compilation.

Page 166 of Sinnott:

James Bodine, 5th. son of John Bodine (#10) and Dorcas, born 1759 according to Tremain, vol. 1, p. 840. Sinnott gives Dec. 17, 1758.

James, son of James, 5th. child of John Bodine (#10). Wife was Margaret, and they had William who married Rosanna Willets, and had George James, who married Emiline Williams; William Oakley and Margaret who married Edwin Salter; and Abraham. These children are not listed in Sinnott, but are listed in Salter's volume, previously referred to.

Page 167 of Sinnott:

James Bodine. Sinnott's data regarding him is duplicated in Lee's "Genealogical and Personal Memorial of Mercer County, New Jersey", vol. 1, pp. 318-319.

Page 170 of Sinnott:

The preceeding work by Lee, vol. 4, pp. 1369-1370 lists the family of George Washington Bodine,-9th. child of Rev. John, the 2nd. child of John Bodine (#14),-as including Jesse Fowler, Susanna Rebecca, John Pierson, and George Washington, all by his second wife.

The following wills have been noted:

Page 156 of Sinnott:

Will of John Bodine, son of John Bodine (#2), is included in the Collections of the New York Historical Society, Abstracts of Wills, vol. 2, p. 333 and is recorded on page 159 of liber 10; it is also listed in the Calendar of Land Papers in the Office of the Secretary of State of New York, p. 81, recorded on page 84 of v. 4 of Land Papers.

Petition of his sister, Marianna Abelin, relative to his effects, is included in English MSS, vol. LXVI, p. 89, and Calendar of Historical MSS in the Office of the Secretary of State of New York, Albany, N. Y., vol. 2, p. 486.

The following wills are included in the New Jersey Archives, volumes and pages as noted:-

Page 157 of Sinnott:

Will of Isaac Bodine (#3)	vol. 32,	p. 34
" " John Bodine of Essex County	30,	51
Frederick Bodine	33,	48
Abraham Bodine (m. Mary Low)	33	47

Page 158 of Sinnott:

Will of Jacob Bodine, Jr. (4th. son of Jacob (#4)	vol. 30,	p. 50

Page 161 of Sinnott:

Will of John Bodine of Raritan Landing	vol. 30,	p. 51
Will of John Bodine	33	48
Marriage license of Peter Bodine and Mary Hartrebe	vol. 22,	pp. 27, 449

The following wills included in the "Collections of the New York Historical Society, Abstracts of Wills," vol. 2:-

Page 163 of Sinnott:

Will of Vincent Bodine, at page 9

Will of his wife, Heyltje Smith, at page 287.

Miscellaneous Bodine records appear on pp. 45; 355-361; 59, 553-556 of the New Harlem Register (Henry P. Toler, 1903)

APPENDIX H
Bridon Family

Information of this family is included on pp. 154-156 of the Bodine records in Sinnott's work. While it is possible that the family is not a collateral line with the Bodine line with which we are concerned in the preparation of this volume, yet it appears desirable to include here, certain data, supplementary to that in Sinnott's work, which amplifies some of the material of that volume, to page 156 of which the following items are applicable.

The will of Francois Bridon, Sr., made in 1703 and proved in 1704 - for the settlement of which his daughter Hester (Bridon) Bodine, second wife of Joan Bodine (#2), made the inventory - is included in the Collections of the New York Historical Society , Abstracts of Wills, vol. 1, p. 319, and is recorded on page 385 of liber 5-6.

His son, Francois Bridon, Jr., probably lived in Boston, before his removal to Staten Island, as he was an elder of the Boston French church in 1704. (Baird's "Huguenot Emigration to America", vol. 1, pp. 14-15). He probably died without issue, as his will, made Dec. 16, 1702, in Boston, and proved there October 22, 1723, names his wife as sole heir and executrix . (Cal. of Wills, by Fernow, p. 13. New York State).

The widow of Francois, Jr., in her will, refers to Esther and John Bodine as her cousins. This is evidently incorrect , as she was a sister-in-law of Esther (Bridon) Bodine, the sister of her husband, and wife of John Bodine (#2). No mention is made of any children in the will. (Collections of the New York Historical Society, Abstracts of Wills, vol. 2, pp. 304-305, recorded on p. 5 of liber 10).

A daughter of Francois Bridon, Sr., Susanna Bridon, married, Dennis Rushé (or Rusjé). She was not naturalized in England at the time her parents were. She had a daughter, Hester Rusjé, bp. April 16, 1710. (Collections of the New York Genealogical and Biographical Society, vol. 2, p. 345). The will of John Bodine , and the petition of his sister, Marianna Abelin, relative to his estate, mention their uncle (by marriage), Dennis Rusjé. They were children of Esther (Bridon) Bodine, evidently a sister of Susanna. (Collections of the New York Historical Society, Abstracts of Wills, vol. 2, p. 333, recorded on p. 159 of liber 10; and Calendar of Land Papers in the Office of the Secretary of State of New York, p. 81, recorded on p. 84 of vol. 4 of Land Papers; English MSS, vol. LXVI, p. 89, and Calendar of Historical MSS in the Office of the Secratary of State of New York, vol. 2, p. 486).

Miscellaneous records are included in Leng and Davis' "Staten Island and its People", vol. 2, p. 868.

APPENDIX P

Bibliography for 1946 records

New York State

Calendar of Historical Manuscripts in the Office of the Secretary of State, Albany, N. Y. - E. B. O'Callaghan, 1865.
Vol. 1, Dutch MSS, 1630-1664.
Vol. 2, English MSS, 1664-1776.

Calendar of Land Papers, 1634-1803, in the Office of the Secretary of State, Albany, N. Y. - 1864.

Documentary History of the State of New York. - E. B. O'Callaghan vols. 2, 3.

Documents Relating to the Colonial History of the State of N. Y. Vols. 1, 2, 3, 4, 6, 13, 14.

History of New Netherland, or New York under the Dutch, - E. B. O'Callaghan, 1846. Vols. 1, 2.

History of New Netherland, Province of New York and State of New York. Wm. Dunlap, 1839.

History of the State of New York, 1609-1664, vol. 1. - John Roymn Brodhead, 1853.

History of New York, vol. 1. - Columbia University Press.

Index to Volumes 1, 2, 3 of Translations of Dutch MSS in the Office of the Secretary of State of New York. - E. B. O'Callaghan , 1870.

New Netherland Register, vol. 1. - Dingman Versteeg, 1911.

New York State Library Bulletin #58, 1902. (History 6). Calendar of Council Minutes, 1668-1783.

Register of New Netherland, 1626-1674. - E. B. O'Callaghan, 1865.

Albany, County and City

Albany Chronicles. - Cuyler Reynolds, 1906.

Annals of Albany. - Joel Munsell. Vols. 3, 4, 6.

Collections on the History of Albany. - Joel Munsell. Volume 2, 1867; vol. 4, 1871.

Court Minutes of Albany, Colony of Rensselaerswyck and Schenectady. - A. J. F. Van Laer, 1926. Vol. 1, 1668-1673; vol. 2, 1675-1680.

Dutch Settlers Society of Albany, Yearbooks.

Early Records of the City and County of Albany and Colony of Rensselaerswyck. - Jonathan Pearson, 1869.
Vol. 1, Deeds, 1656-1675.
Vol. 2, Deeds, 1678-1704.
Vol. 3, Notarial Papers, 1660-1696.
Vol. 4, Mortgages, 1658-1660.

History of the City of Albany, New York. - Arthur James Weise. 1884.

History of the County of Albany, 1609-1880. - George R. Howell, and Jonathan Tenney, 1886.

Minutes of the Court of Fort Orange and Beverwyck. - A. J. F. Van Laer, 1920.
Vol. 1, 1652-1656.
Vol. 2, 1657-1660.

Minutes of the Court of Rensselaerswyck, 1648-1652. - A. J. F. Van Laer, 1922.

Van Rensselaer-Bowier Manuscripts. - A. J. F. Van Laer, 1908.

Dutchess County

Biographical History of Dutchess County, N. Y. - J. H. Beers and Company.

History of Dutchess County, N. Y., 1683-1882. - James H. Smith. 1882.

History of Dutchess County, N. Y., 1609-1876. - Philip H. Smith. 1877.

Historic Old Rhinebeck. - Howard H. Morse, 1908.

History of Rhinebeck. - Edwin M. Smith, 1881.

Eagle's History of Poughkeepsie, N. Y. - Edmund Platt, 1905.

Kings County, L. I.

History of Long Island, N. Y. - Nathaniel S. Prime, 1845.

History of Kings County and City of Brooklyn, 1683-1884, vol. 1. Henry R. Stiles, 1884.

History of the City of Brooklyn and Kings County. - Stephen M. Ostrander, 1894.

History of the City of Brooklyn. - Henry R. Stiles, 1867. Vol. 1.

Memoirs of the Long Island Historical Society. Vol. 1, 1867.

Rensselaer County

History of Rensselaer County, N. Y. - Nathaniel Bartlett Sylvester.

Landmarks of Rensselaer County, N. Y. - George Baker Anderson, 1897.

Richmond County

Annals of Staten Island. - J. J. Clute, 1877.

Historical Records of Staten Island. - Erastus Brooks, 1883.

Staten Island and its People, 1609-19[illegible]. - Chas. W. Long and Wm. T. Davis, 1930. 3 vols.

Ulster County and Kingston

Dutch Records of Kingston, 1661-1664, in New York Historical Association Proceedings, vol. 11, 1912.

History of Kingston, New York. - Marius Schoonmaker, 1888.

History of Kingston. - Howard Hendricks.

History of Ulster County, New York. - Nathaniel Bartlett Sylvester, 1880.

Olde Ulster. - B. M. Brink. Vols. 1, 2, 3, 4, 5, 6, 8, 10.

Ulster County Probate Records. - Gustav Anjou. Vol. 1.

New York City

Harlem, its Origin and Early Annals. - James Riker, 1881.

Historic New York. - Maude Wilder Goodwin. Vol. 1, 1898; vol. 2, 1899.

History of the City of New York. - Martha J. Lamb, 1877, vol. 1.

History of the City of New York. - David T. Valentine, 1853.

Leslie's History of the Greater New York. - Daniel Van Pelt, 1892 vol. 2.

Memorial History of the City of New York. - James Grant Wilson, 1892. Vol. 1.

Minutes of the Orphanmasters of New Amsterdam, 1655-1663. - Berthold Fernow. Vol. 1, 1902; vol. 2, 1907.

New Harlem Register. - Henry P. Toler, 1903.

New York Historical Society. Collections. Abstracts of Wills:
Vol. 1, 1665-1707 (1892).
Vol. 2, 1708-1728 (1893).
Vol. 16. (1907).

Records of New Amsterdam, 1653-1674. - Berthold Fernow. 7 vols.

Revised History of Harlem. - James Riker, 1904.

Genealogical

Famous Families of New York. - Margherita Arlina Hamm, 1902. Vol. 2.

Genealogical and Family History of Central New York. - William Richard Cutter, 1912. Vol. 2.

Genealogical and Family History of Northern New York. - 1910. V. 1.

Genealogical and Family History of Southern New York and the Hudson River Valley. - Cuyler Reynolds. 3 vols.

Genealogical and Family History of New York. - William S. Pelletrau, 1907. Vols. 1, 3.

Genealogical Notes of New York and New England Families. - S. V. Talcott, 1883.

Hudson Mohawk Valley Genealogical and Family Memoirs. - Lewis Publishing Co., 1911. 4 vols.

Annals of Newtown, Queens County, N. Y. - James Riker, 1852.

Documentary History of the Dutch Congregation of Oyster Bay, Long Island. - Henry A. Stoutenburgh, 1902.

First Settlers of Albany County, 1630-1800. - Jonathan Pearson, 1872.

History of New Paltz, New York. - Ralph LeFevre, 1903.

Oxford, New York, Annals of. - Henry J Galpin, 1906.

Register of the Early Settlers of Kings County, L. I. - T. G. Bergen, 1881.

Ulster County, Biographical Record of. - J. H. Beers Company.

State of New Jersey

Archives of the State of New Jersey. Vols. 22, 32, 34, 35.

History of Hunterdon and Somerset Counties, N. J. - James Snell, 1887.

Memorial Sermons and Historical Notes of the Reformed Dutch Church in Somerset County, N. J. - Abraham Messler, 1873.

Genealogical

Early Germans of New Jersey. - Theodore F. Chambers, 1895.

Genealogical and Memorial History of the State of New Jersey. Volumes 3, 4. - Francis Bazley Lee.

Genealogical and Personal Memorial of Mercer County, N. J. -Francis Bazley Lee, 1907. 2 vols.

Genealogical Magazine of New Jersey, vol. 4, 1928-1929.

History of Monmouth and Ocean Counties, N. J. - Edwin Salter. 3 vols.

Pre-Revolutionary Dutch Houses and Families of Northern New Jersey and Southern New York. - Miss Rosalie Fellows Bailey, 1936.

History of the City of Patterson and the County of Passaic, N. J. William Nelson, 1901.

- - - - - - - - - - - - - - - - - - - -

Church Records

Holland Society of New York, Yearbooks.
- 1897. - Brooklyn Church records. Reformed Dutch Church.
- 1898. - Flatbush Church records. ditto
- 1904. - Albany Church records. ditto

New York Genealogical and Biographical Society, Collections.
Reformed Dutch Church records, New York City.
- Vol. 1. Marriages.
- Vol. 2. Baptisms.
- Vol. 3. Baptisms.

Register of the Old Dutch Church, Kingston, N. Y. - Rev. Roswell Randall Hoes, 1891.

Somerset County (N. J.) Historical Quarterlies, vol. 2, 3, 4, 5,6 and 8. Raritan (now Somerville), Somerset County, Church records; and Readington (formerly North Branch), Hunterdon County, Church records.

Genealogy

American Genealogy. - Jerome Holgate, 1848.

Americana (American Historical Society). Vol. 26.

Bodine Family, in Annals of the Sinnott, Rogers, Coffin, Coxlies, Reeves, Bodine and Allied Families. - Mary Elizabeth Sinnott , 1905.

Bergen Genealogy. - Teunis G. Bergen, 1876.

Corson Family in America, Three Hundred Years with. - Orville Corson, 1939. Vol. 1.

Crall, the Ancestry of Leander Howard. - Frank Alleben, 1908.

Depew, Ancestry of Chauncey M. - William A. Eardeley, 1918.

Evacuation Day, 1783. - James Riker.

Kip Family in America, History of. - Frederic Ellsworth Kip. 1928.

Knickerbocker-Viele, Sketches of allied Families of. -Kathlyn K. Viele, 1916.

Lansing Family. - Claude G. Munsell, 1916.

Tremain Family in America, History of. - Tremaine and Poole 1901. 2 vols.

Van Deusen Genealogy. 2 vols.

Van Wagenen Family. - Gerrit H. Van Wagenen, 1884.

Washington Ancestry, and Records of McClain, Johnson and Forty Other Colonial American Families. - Charles A. Hoppin, 1932. Volume 3.

Miscellaneous

History of LaPorte County, Indiana. - Jasper Packard, 1876.

Holland Society Yearbook, 1900.

Huguenot Emigration to America. - Rev. Chas. W. Baird, 1885. Two volumes.

National Genealogical Society Quarterly, vol. 27, 29.

Nebraska and Midwest Genealogical Record, vol. 3, 1925.

New York Genealogical and Biographical Record, vols. 1, 2, 3, 8, 9, 10, 16, 19, 20, 21, 22, 23, 27, 28, 30, 31, 33, 46, 47, 48, 49 55, 57, 60, 63, 64, 65, 66, 68, 69, 71, 72, 73, 74.

Saint Nicholas Society of the City of New York, vol. 1, 2.

Utah Genealogical and Historical Magazine, vol. 28, 1937.

4359